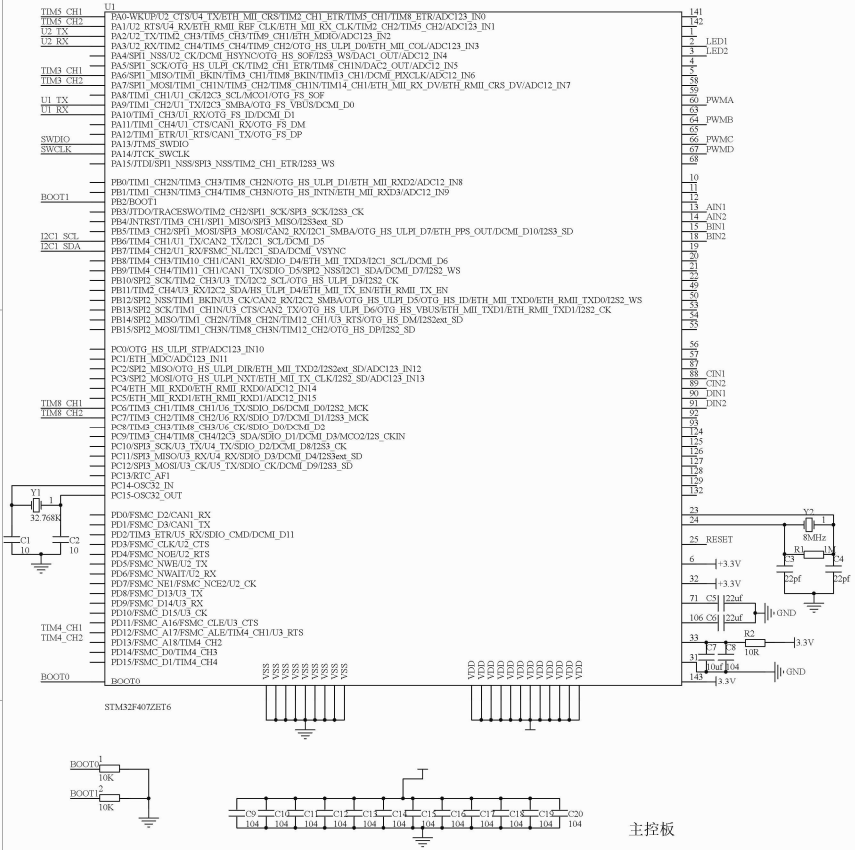

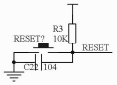

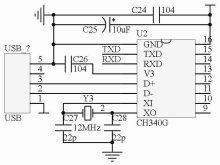

Title		
Size C	Number	Revision
Date: 2019/2/27	Sheet of	
File: C:\Users\...\RIKI3.2.SchDoc	Drawn By:	