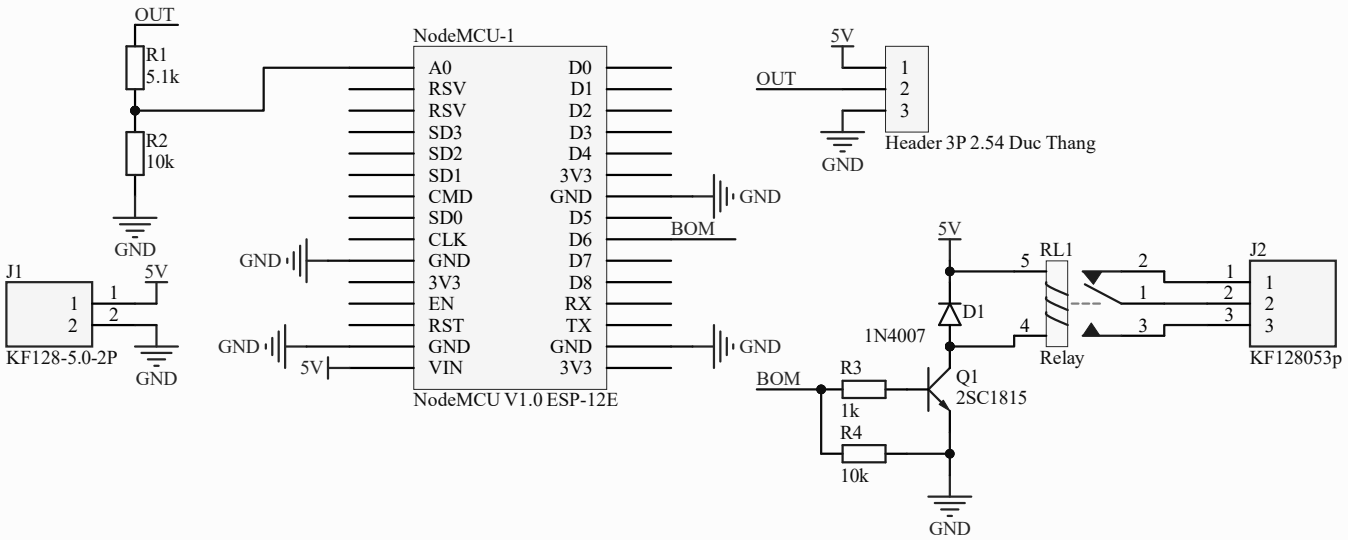

Title		
Size A	Number	Revision
Date: 4/15/2025	Sheet of	
File: F:\ESP8266_CAM_BIEN_DO_DUC_NUOC\RELAY\..\Sheet1.SchDoc	Drawn By:	