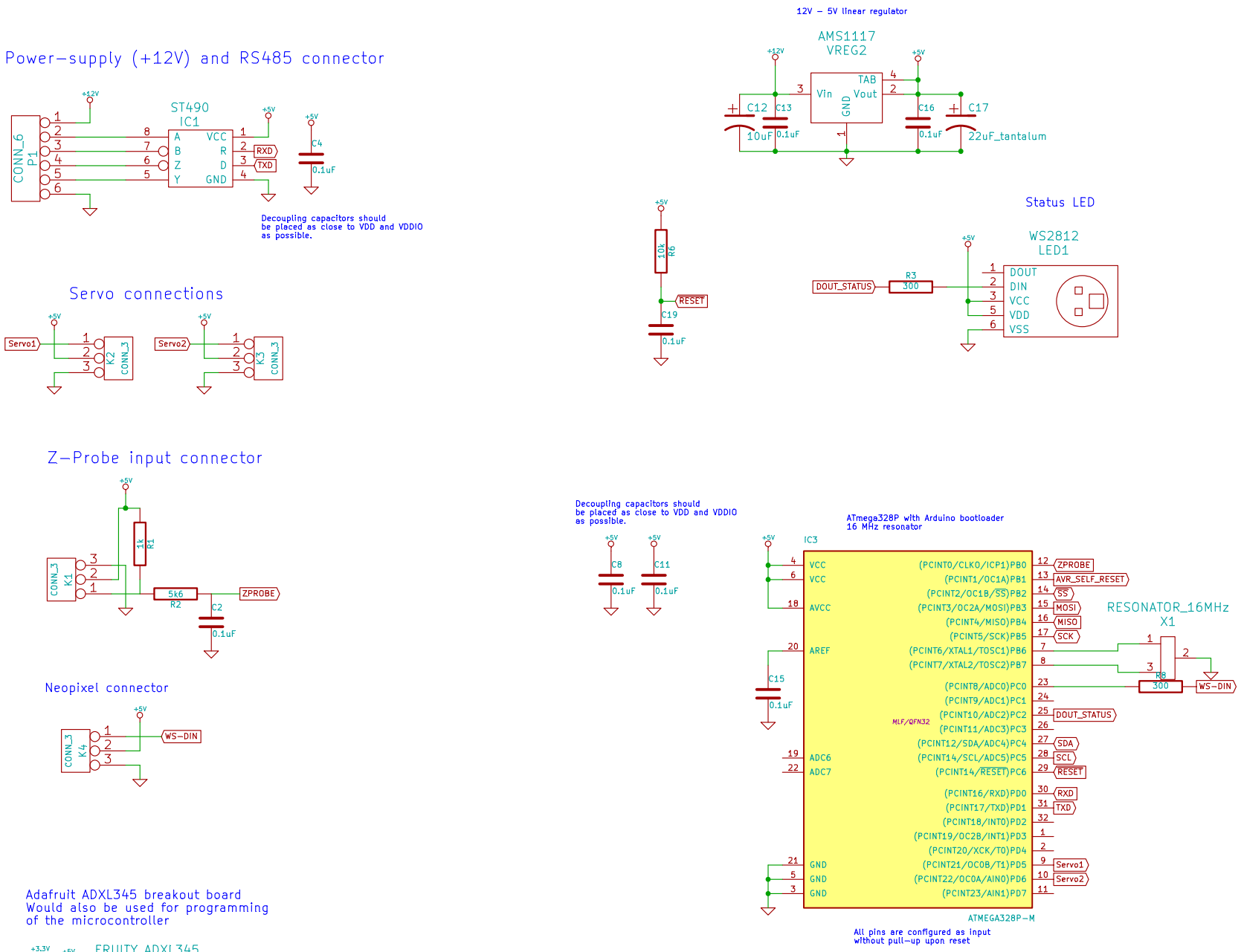

FirePick		
File: FPRX.sch		
Sheet: /		
Title: FirePick - µHDMI RPi Cam + WS2812 + Accelerometer		
Size: A3	Date: 18 jun 2014	**Rev: 1**
KiCad E.D.A. eeschema (2013-07-07 BZR 4022)-stable		Id: 1/1