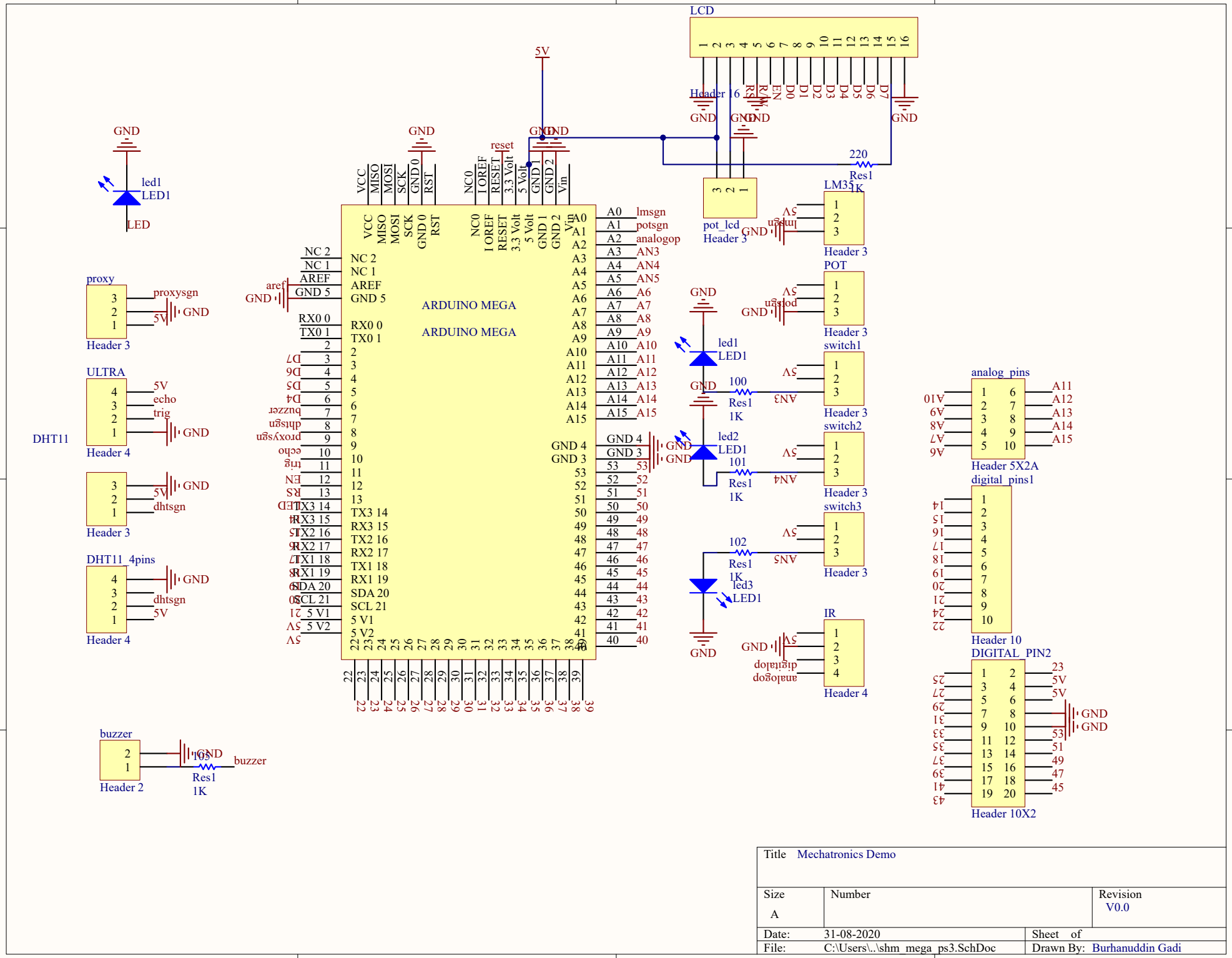

Title	Mechatronics Demo		
Size A	Number		Revision V0.0
Date:	31-08-2020	Sheet of	
File:	C:\Users\..\shm_mega_ps3.SchDoc	Drawn By:	Burhanuddin Gadi