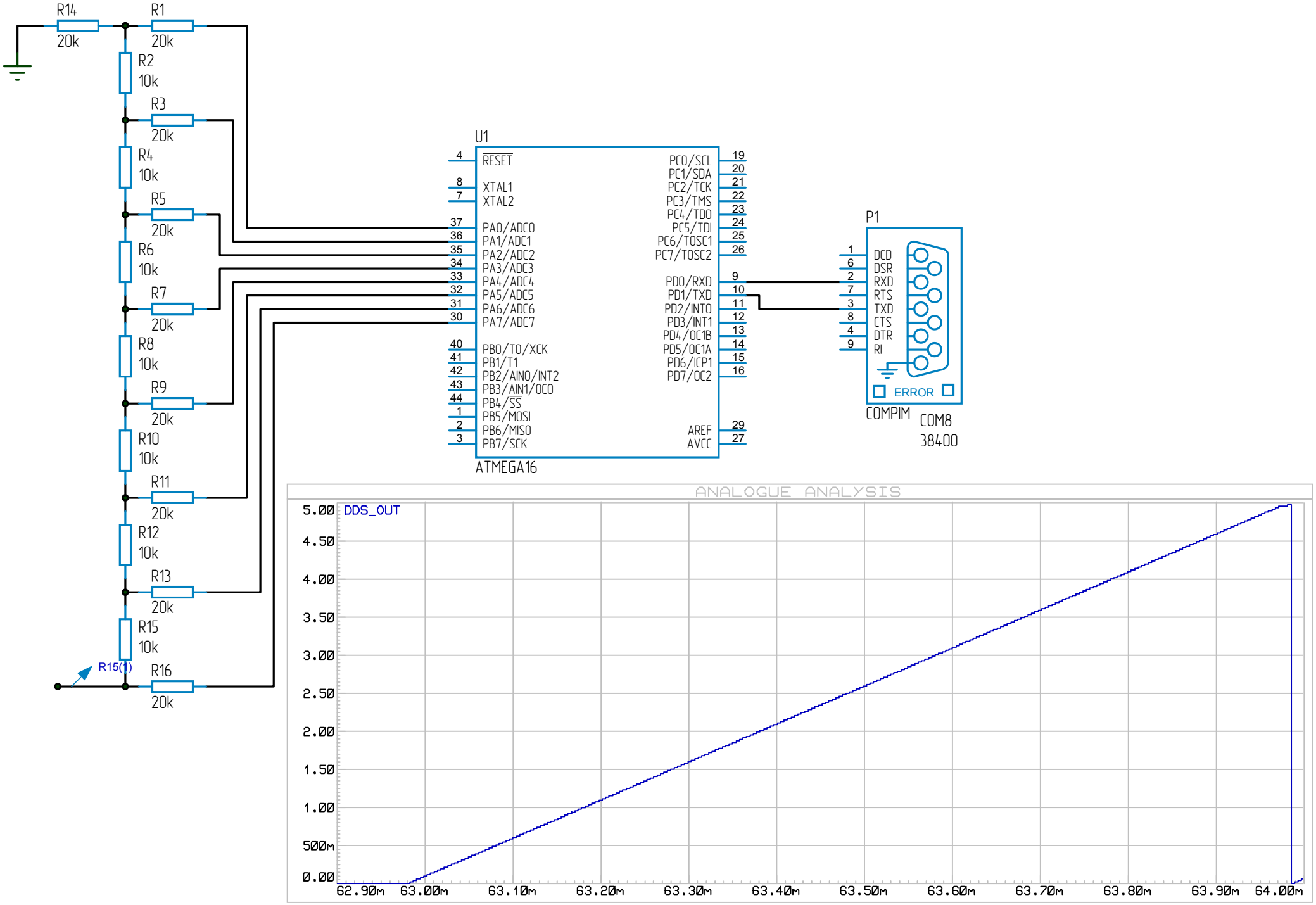
R14
20k
R1
20k
R2
10k
R3
20k
R4
10k
R5
20k
R6
10k
R7
20k
R8
10k
R9
20k
R10
10k
R11
20k
R12
10k
R13
20k
R15
10k
R15(1)
R16
20k
U1
RESET
XTAL1
XTAL2
PA0/ADC0
PA1/ADC1
PA2/ADC2
PA3/ADC3
PA4/ADC4
PA5/ADC5
PA6/ADC6
PA7/ADC7
PB0/T0/XCK
PB1/T1
PB2/AIN0/INT2
PB3/AIN1/OC0
PB4/SS
PB5/MOSI
PB6/MISO
PB7/SCK
PC0/SCL
PC1/SDA
PC2/TCK
PC3/TMS
PC4/TDO
PC5/TDI
PC6/TOSC1
PC7/TOSC2
PD0/RXD
PD1/TXD
PD2/INT0
PD3/INT1
PD4/OC1B
PD5/OC1A
PD6/ICP1
PD7/OC2
AREF
AVCC
ATMEGA16
P1
DCD
DSR
RXD
RTS
TXD
CTS
DTR
RI
ERROR
COMPIM
COM8
38400
ANALOGUE ANALYSIS
DDS_OUT
5.00
4.50
4.00
3.50
3.00
2.50
2.00
1.50
1.00
500m
0.00
62.90m
63.00m
63.10m
63.20m
63.30m
63.40m
63.50m
63.60m
63.70m
63.80m
63.90m
64.00m