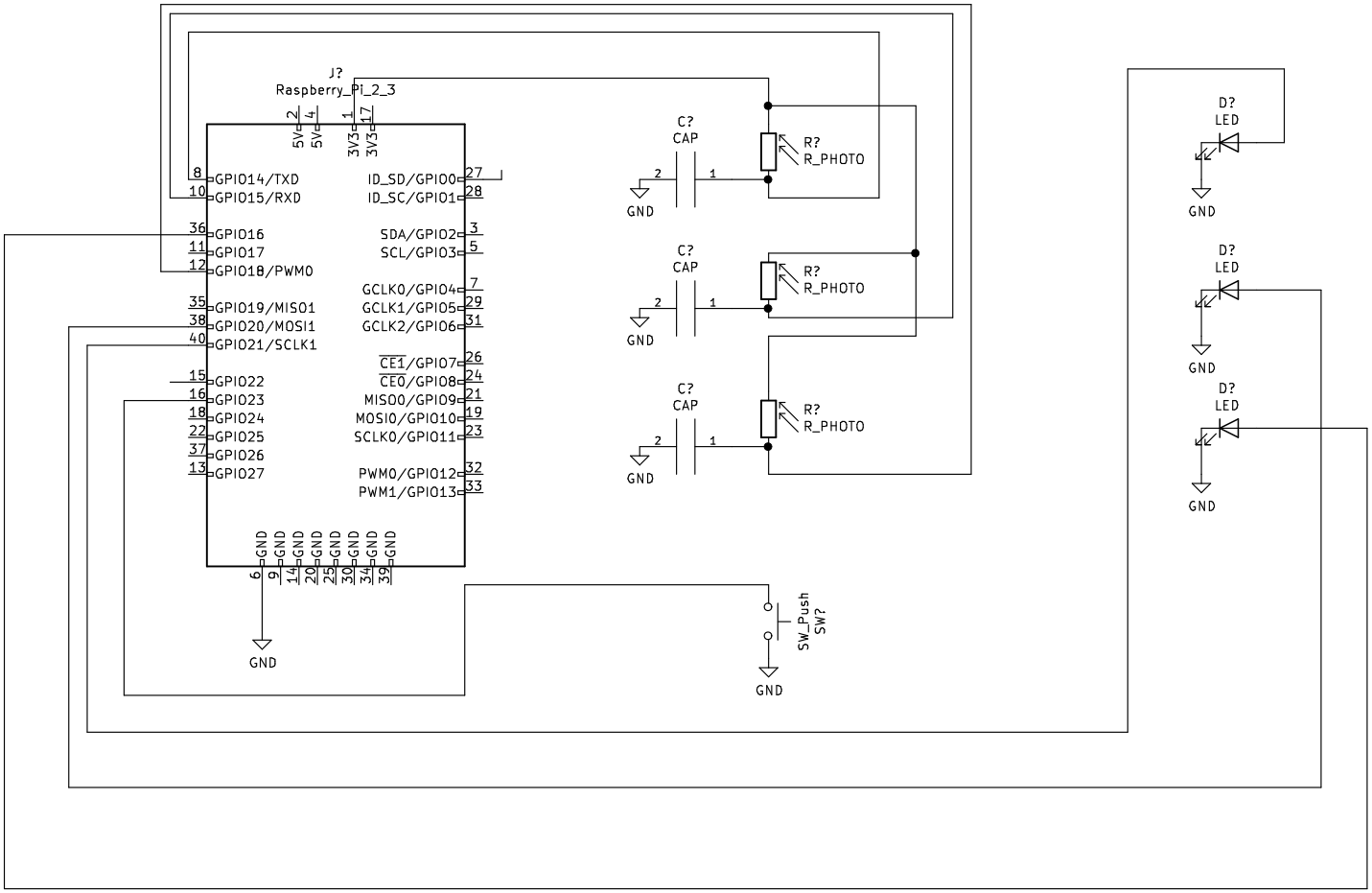

Sheet: /
File: pizzaTime.sch

Title: RaspberryPiInterface

Size: A4	Date:	Rev: 1
KiCad E.D.A. eeschema 5.0.2-bee76a070ubuntu18.04.1		Id: 1/1