Regulation & Governance

Regulation & Governance (2018) doi:10.1111/rego.12215

Between regulatory field structuring and organizational roles: Intermediation in the field of sustainable urban development

Joel Bothello

Department of Management, John Molson School of Business, Concordia University, Montreal, Canada

Afshin Mehrpouya

Department of Accounting and Management Control, HEC Paris, Jouy-en-Josas, France

Abstract

Recent contributions in the domains of governance and regulation elucidate the importance of rule-intermediation (RI), the role that organizations adopt to bridge actors with regulatory or "rulemaking" roles and those with target or "rule-taking" roles. Intermediation not only enables the diffusion and translation of regulatory norms, but also allows for the representation of different actors in policymaking arenas. While prior studies have explored the roles that such RIs adopt to facilitate their intermediation functions, we have yet to consider how field-level structuring processes influence (and are influenced by) the various and changing roles adopted by RI. In this study we focus on the mutually constitutive relations between field-level change processes and the evolving roles of RIs by studying the rise of the International Council for Local Environmental Initiatives (ICLEI)/Local Governments for Sustainability, an RI serving as a bridge for sustainable urban development policies between the United Nations and local authorities. Using ICLEI as an illustrative case, we theorize four different processes of regulatory field structuration: problematization, role specialization, marketization, and orchestrated decentralization. We discuss their implications for RI roles in the field and further theorize the changing dynamics of trickle-up intermediation processes as an RI gains power and influence.

Keywords: governance, intermediation, rule-intermediary, sustainable development.

1. Introduction

In the contemporary era, norms such as competition, democracy, transparency, and environmentalism have come to dominate policymaking and organizational governance (Drori *et al.* 2006; Mehrpouya & Djelic 2014; Bothello & Salles-Djelic 2017). In this new paradigm, actors, technologies, and knowledge in governance have rapidly proliferated, leading to the rise of regulatory fields for different public goods (Gulbrandsen 2008; Dingwerth & Pattberg 2009; Fransen 2011; Reinecke *et al.* 2012). The types of actors involved in these fields vary widely, from intergovernmental – and therefore, state-mandated – organizations, such as the United Nations (UN), the Organization for Economic Cooperation and Development (OECD), and the European Union (Abbott *et al.* 2015; Abbott 2014), to a fast expanding apparatus of transnational private regulators, ranging from multistakeholder initiatives to industry-backed and commercial entities (Bartley 2007). The agendas of these actors are equally diverse, yet are broadly structured under norms of scientization (or reliance on expertise), marketization (or reliance on market-based organizing principles), democratization (or reliance on stakeholder consultation processes and related rituals for input legitimacy), and moral rationalization (or reliance on the creation of normative regimes that nudge targets toward compliance) (Djelic & Sahlin-Andersson 2005; Gulbrandsen 2008; Djelic 2011b).

However, the effectiveness of transnational "rules" is contingent upon a constellation of rule-intermediaries (RIs) that not only enable translation, adaptation, and travelling of rules, but also facilitate accountability and

Correspondence: Joel Bothello, Department of Management, John Molson School of Business, Concordia University, 1450 Guy St., Montreal, QC H3H 0A1, Canada. Email: joel.bothello@concordia.ca

Accepted for publication 27 July 2018.

© 2018 John Wiley & Sons Australia, Ltd

push for compliance by the regulatory targets (Levi-Faur & Jordana 2005; Bartley 2007; Djelic 2011b; Abbott *et al.* 2015). Along with their implementation and monitoring roles in performing these functions, intermediaries also frequently act as representatives in transnational arenas, where they aggregate and promote the interests of (sub)national actors (Levi-Faur & Starobin 2014). In other words, RIs operate between regulatory rulemakers (RMs) and targets, or rule-takers (RTs); they are central to organizing the mutually constituting "trickle-up" (RT → RI → RM) and "trickle-down" (from RM → RI → RT) feedback processes in transnational governance (Djelic 2006; Auld & Renckens 2017).

While recent research on intermediation has made major advances toward elucidating the characteristics of RIs in regulatory fields (Gulbrandsen 2008; Dingwerth & Pattberg 2009; Reinecke *et al.* 2012; Abbott *et al.* 2017a, b), these studies have traditionally examined RI roles without considering the influence of broader field-level processes. An exploration of how the former conditions the latter – and vice versa – would not only contribute to a process-based understanding of intermediary governance but would also facilitate theory development regarding organizational responses accompanying field (re)structuration.

In this article, we aim to contribute to a growing domain of research investigating how RIs play a role in defining, expanding, and shaping transnational governance (Abbott *et al.* 2015, 2017b,c). Building upon this body of research, we explore the evolving trickle-up roles of an RI in an emergent and evolving field (Djelic 2011a; Abbott *et al.* 2015; Mair *et al.* 2012; Levi-Faur & Starobin 2014). Specifically, we describe how rulemaking developments alter the roles and functions of intermediaries, specifically highlighting the role transformations of one specific intermediary as it responds to such changes. Taking the International Council for Local Environmental Initiatives (ICLEI)/Local Governments for Sustainability as a case study, our paper investigates the conditions under which this RI emerged, identifying how its trickle-up roles shifted over time as a response to the structuring of the field of sustainable urban development.

ICLEI is a local government organization (LGO)[1] (Brugmann 2007) that was established in 1990 to represent local authorities at transnational fora related to environmentalism. The organization offers an exemplar case for examining the interplay between role changes and the trickle-up processes of rulemaking: it is the longest running and largest urban sustainability LGO with approximately 1,200 local members in 43 countries, employing more than 200 staff. ICLEI has been active in driving numerous "field configuring events" (Lampel & Meyer 2008), promoting local participation in global regulation since the emergence of the sustainable urban development field in the late 1980s. The organization was notably central to the establishment of Local Agenda 21 (LA21), a landmark sustainable urban development program engaging more than 6,400 cities in towns in 113 countries (Brugmann 2007). Given the co-evolution of sustainable urban development practices and ICLEI, the organization offers a compelling case for examining the mutually constitutive interactions between regulatory intermediaries and the field (Lafferty & Eckerberg 2013; Leffel, 2017; Kaufman & Zernike 2012).

Through our study of the field of sustainable urban development and of ICLEI, we aim to make two contributions to studies of regulatory intermediation. Our first contribution is to highlight the value of simultaneous analyses of field-level structures and RIs' embedded agency (Emirbayer & Mische 1998). We show how the field of sustainable urban development evolves through four field-structuring processes: problematization, role specialization, marketization, and orchestrated decentralization. As ICLEI's power and legitimacy subsequently expand – and as the regulatory field evolves – its relations to both RTs and RMs change. The organization shifts from direct work in representation to more facilitative roles, including curating and orchestrating practices. In explicating these changes, our article shows how the shifting relational roles between regulatory actors theorized about in prior literature (Havinga & Verbruggen 2017) may in fact be organizational responses to field-level dynamics.

Our second contribution is to provide new insights into the dynamics of trickle-up processes, specifically the regulatory intermediary actions aiming to intervene in rulemaking. In the introduction to this special issue, the authors emphasize the importance of attending to the level of officialization and formalization of RIs in their mutually constitutive relations to RMs and targets (Mena *et al.* 2018). Using ICLEI as an example, we show how an RI may begin with a representation mandate from certain RTs (local authorities) that contests the role of established representatives (federal governments). This RI may then increasingly adopt expanded official roles but also a set of "unofficial" roles in shaping field (sustainable urban development) rules to allow the participation of local actors. We emphasize the role of field-level changes in these "mandate shifts" at this RI. We identify four distinct RI trickle-up processes: "insurgent," "technocratic," "curator," and "orchestrator" trickle-up

 © 2018 John Wiley & Sons Australia, Ltd

intermediation, demonstrating how these four intermediation processes are built on fundamentally different relations to RMs, RTs, and other RIs.

Our paper is organized as follows. We begin by outlining recent research on regulatory intermediation, specifically highlighting the importance of intermediary roles in the process. Building upon prior research, we illustrate that intermediation roles are fluid and change according to the evolution of the regulatory field. We describe our research design and methodology, motivating our selection of ICLEI as a case study of interest. We then present our findings, organized according to specific phases in the regulatory field of sustainable urban development, linking these phases to role transformations. We conclude the paper with a discussion of how the findings contribute to research on intermediation.

2. Regulatory intermediation: Between field and roles

In recent decades, transnational governance regimes have shifted from state and intergovernmental regulation to a diverse set of private regulatory actors that compete to establish global "rules of the game" (Djelic & Sahlin-Andersson 2006). The accompanying explosion in the number and variety of actors, knowledge forms, and technologies currently driving regulation has been termed as a shift toward "regulatory capitalism" (Levi-Faur & Jordana 2005). Although this phenomenon has traditionally been examined through dualist analyses of RMs and RTs, the sophistication, expansion, and diversity of contemporary regulatory ecosystems require novel conceptual tools (Abbott *et al.* 2017a). Accordingly, recent political science literature has begun attending to this complexity by highlighting the role of "regulatory intermediaries;" in this model, regulatory roles are broken down into "regulator" or "RM," "RI," and "target" or "RT" roles. Levi-Faur and Starobin broadly define RIs as "regulatory actors with the capacity to affect, control, and monitor relations between rule-makers and rule-takers via their interpretations of standards and their role in the increasingly institutionalized processes of monitoring, verification, testing, auditing, and certification" (2014, p. 21). This literature has conceptualized different reasons for regulators to rely on regulatory intermediaries, which include: operational capacity, legitimacy, and the relative independence of intermediaries compared with regulators (Abbott *et al.* 2017a).

In more recent work, however, RM, RT, and RI positions are conceptualized less as fixed, organization types and more as contingent, relational roles for regulatory actors. Havinga and Verbruggen (2017), for example, show how one organization can be "chameleonic," with roles that vary according to the type of stakeholder and timing. These advancements elucidate the need for more constructivist studies of RIs, with more attention paid to the role of discourses and knowledge in the workings of RIs (Mena *et al.* 2018).

What has been missing, though, is an examination of how field-level structural dynamics influence the type of roles adopted by a RI. Prior work often assumes that role adoption and changes are "actor-centric," the result of allocation by RMs (Abbott *et al.* 2015), the welfare of RTs (Koenig-Archibugi & Macdonald 2017), or agentic action on the part of intermediaries themselves (Van der Heijden 2017). In other words, attention to contextual influences (e.g. field structures and processes) on RI role dynamics has been scarce.

Several papers in this area have hinted at how regulatory field[2] emergence and stabilization can affect the type of intermediation that occurs. Reinecke *et al.* (2012) have illustrated how marketization emerged in the private regulation of fair trade food when organizations reached dynamic equilibrium between competition and cooperation. Similarly, in his analysis of the regulatory field for working conditions in garment manufacturing, Fransen (2011) revealed the conditions for the rise of a competition dynamic, and how different private regulators represent disparate political coalitions with different definitions of the problem and the solution, preventing consolidation among seven private regulators. Dingwerth and Pattberg (2009) focused instead on the role of institutional norms, their institutionalization, and their relations with neighboring fields in bringing stability to regulatory fields. These studies point to the impact of field consolidation and/or fragmentation on regulatory actors roles, yet have not explicitly examined their mutually constitutive interactions. We attend to this area in our article.

The regulatory field we focus on provides an example of a field that has undergone rapid consolidation during the past 20 years. The actor at the center of our analysis, ICLEI, played a central role both in the emergence and maintenance of the "local sustainable development" regulatory field. We focus on the changing roles of ICLEI and their relations to the changing structure of the regulatory field. Among the different roles that this RI adopts,

© 2018 John Wiley & Sons Australia, Ltd

we place special emphasis on how maturation of the field and the role of ICLEI within it lead to expanded trickle-up processes both from targets to this RI and from this RI toward the regulators (especially the UN).

3. Research design, case selection and methods

3.1. Research setting

In examining how role changes of a focal intermediary occur, we elected to study ICLEI, an intermediary established in 1990 to promote local interests in the formulation of sustainable urban development principles. We specifically chose this organization for two reasons: First, ICLEI acts in a dual capacity, as an "information clearinghouse" providing sustainability support for subnational governments, but also as a representative for local governments in international fora. It thus offered an ideal illustrative case (Flyvbjerg 2006; Siggelkow 2007) for examining role changes and trickle-up and trickle-down processes involved in rulemaking and mediation. Secondly, ICLEI has been identified as a key actor in the diffusion of sustainable urban development practices (Lafferty & Eckerberg 2013; Kaufman & Zernike 2012) and has been the largest environmental city network in the world for two decades (Leffel, 2017). If the success of an intermediary's initiatives is defined in terms of membership and longevity, then the ICLEI offers an exemplar case – the organization is the oldest urban sustainability intermediary currently operating, with approximately 1,200 local members in 43 countries, employing more than 200 staff.

3.2. Research design

We use a case study research design to examine how the establishment and roles of a focal RI can be influenced by changes in the regulatory field (Flyvbjerg 2006; Siggelkow 2007; Yin 2013). Following a process-thinking approach (Langley 1999), we investigate how certain organizational outcomes and changes can be theorized as chronologically sequential responses to external developments. In our specific case, the analysis is based on identifying the salient processes and major developments in the regulatory field (as revealed within official texts and RM reports) and examining reactions by intermediaries (e.g. appropriation, elaboration, deflection, rejection). This model of analysis thus uses macro patterns to explain the micro processes (i.e. role shifts) evident in organization (Ventresca & Mohr 2002, p. 813).

However, our intermediary of interest is novel as this process also works in reverse: role adoption affects field structuration, as well as the roles adopted by proximate actors. The micro-processes involved in role transformation thus have an impact on field-level processes. We accordingly investigated how texts and preparatory documents created by ICLEI (and other intermediaries) were adopted and formalized within RM declarations, conventions, agreements, and reports.

We employed a historiographic method of discourse analysis, utilizing organizational archives as source material (Ventresca & Mohr 2002). Unlike nomothetic approaches that treat archives as datasets, historiographies are idiographic in nature, favoring in-depth scrutiny of discourse produced by a focal organization. A detailed and disciplined reading of myriad – and often unstandardized – sources permits the development of a "thicker" comprehension of an object of inquiry (Geertz 1983). The sources of data are primarily comprised of (bi)annual reports and newsletters over a span of two decades, supplemented by organizational charters, planning/program guides, internal memos and correspondence, archived web pages, and academic articles and book chapters written by organizational members over the same period. Our corpus of texts was thus exhaustive in terms of publicly released documentation. Given that mediation is a relational activity, we also incorporated discourse produced by stakeholders with salient ties to the focal organization, focusing on the prominent organizations adopting rulemaking and intermediation roles within the same regulatory field. For the RMs, documents from major UN fora and preparatory committees (PrepComs) were crucial for reconstructing the discourse that enabled field-level changes, as well as identifying the relevant actors populating this field. In parallel, we sought to situate the role changes vis-à-vis other RIs in the regulatory field. The aim was to analyze the tripartite influences among the focal intermediary, the field, and other RIs. A list of the archival sources is provided in Appendix I, totaling approximately 1,300 pages of data.

As a source of triangulation, we complemented our historiography with a set of six semi-structured interviews that could provide corroboration and further insights. We interviewed two founding members of the focal organization, as well as major executives involved in leadership positions since the organization was established in 1990.

 © 2018 John Wiley & Sons Australia, Ltd

Interviews lasted roughly an hour and were only used to corroborate the data generated from the archival material. In the latter stages of our analysis, we re-established contact with key informants to request that they read through the article to verify our narrative and ensure that we did not misrepresent their accounts. As a result of this two-stage process of verification, we are confident in the robustness of our narrative. Our findings are organized according to four phases where field-configuring processes and events are linked to organizational role changes (Lampel & Meyer 2008; Hardy & Maguire 2010).

4. Sustainable urban development as a regulatory field

The emergence of sustainable urban development as a regulatory field can be traced to the 1987 launch of a landmark environmental report titled *Our Common Future* (also known as the Brundtland Report) issued by the UN World Commission on Environment and Development (Bulkeley & Betsill 2005; Bothello & Salles-Djelic 2017). The Report was the first to situate sustainable urban development on equal footing with other regulatory fields, such as food security, ecosystem protection, and population growth (World Commission on Environment and Development [WCED] 1987). The "Urban Challenge" cast cities as drivers of – but also solutions to – environmental problems, a development further reinforced by the 1992 publication of a more detailed UN program named Local Agenda 21 (LA21) that acted as a planning guide for urban sustainability (International Council for Local Environmental Initiatives [ICLEI], International Development Research Centre [IDRC], United Nations Environment Programme [UNEP] 1996). In subsequent decades, a variety of regulatory instruments, both binding and non-binding, were launched: the United Kingdom (UK), for example, established statutory performance standards in 2000 for municipalities regarding air quality and waste directly based on LA21 (Bulkeley & Betsill 2005). Similarly, by 2007 all Swedish municipalities had adopted LA21 policies (Eckerberg & Forsberg 1998). Beyond the nation-state, various transnational organizations crafted comprehensive non-binding programs, such as "2030" or "Gold Standard" initiatives to promote long-term development of sustainable cities (United Cities and Local Governments [UCLG] 2010; Climate-KIC 2017), accompanying more specific technical standards, such as Leadership in Energy and Environment Design (LEED) and more recently ISO 37000 indicators for the sustainable development of communities.

Accordingly, we conceptualize sustainable urban development as a regulatory field in its own right. Despite some overlap with proximate regulatory fields, such as population growth and poverty alleviation, sustainable urban development has become populated by a diverse set of specialized public and private actors. In concert, the field also contains specific programs, policies, norms, standards, certificates, and rankings designed to direct local authorities toward collectively agreed-upon outcomes. The pressure for RTs to conform to these urban sustainability principles can be coercive, through the threat of legal sanctions, as illustrated by mandatory state policies, but also through the process of "naming and shaming" (Boli 2006), where legitimacy is contingent upon adoption (Guler *et al.* 2002). In Figure 1, we outline the evolution of the field over the course of two decades, indicating the relationships between and among intermediaries during this time and the role responses of ICLEI.

5. Field Phase #1 (1986–1990): Problematization

5.1. Sustainable urban development as a response to environmental tragedies of the commons

The Brundtland Report was the first major environmental report to highlight the importance of effective urban governance for sustainable development: by predicting that "half of humanity [would] live in cities" (WCED 1987, p. 22) by the 21st century, the Report positioned "The Urban Challenge" as an issue interlocked with other "tragedies of the commons" (Hardin 1968), such as overpopulation, poverty, and natural resource consumption (United Nations General Assembly [UNGA] 1983). In practical terms, the Report called for the empowerment of local authorities through decentralization and delegation of political, institutional, and financial resources, as well as through strengthening UN leadership on human settlements through programs such as UN-Habitat (WCED 1987, p. 214). Under this broad canopy of issues and mechanisms, the Brundtland Report triggered a series of public and private initiatives to address economic, social, and environmental issues (Bothello & Salles-Djelic 2017).

© 2018 John Wiley & Sons Australia, Ltd

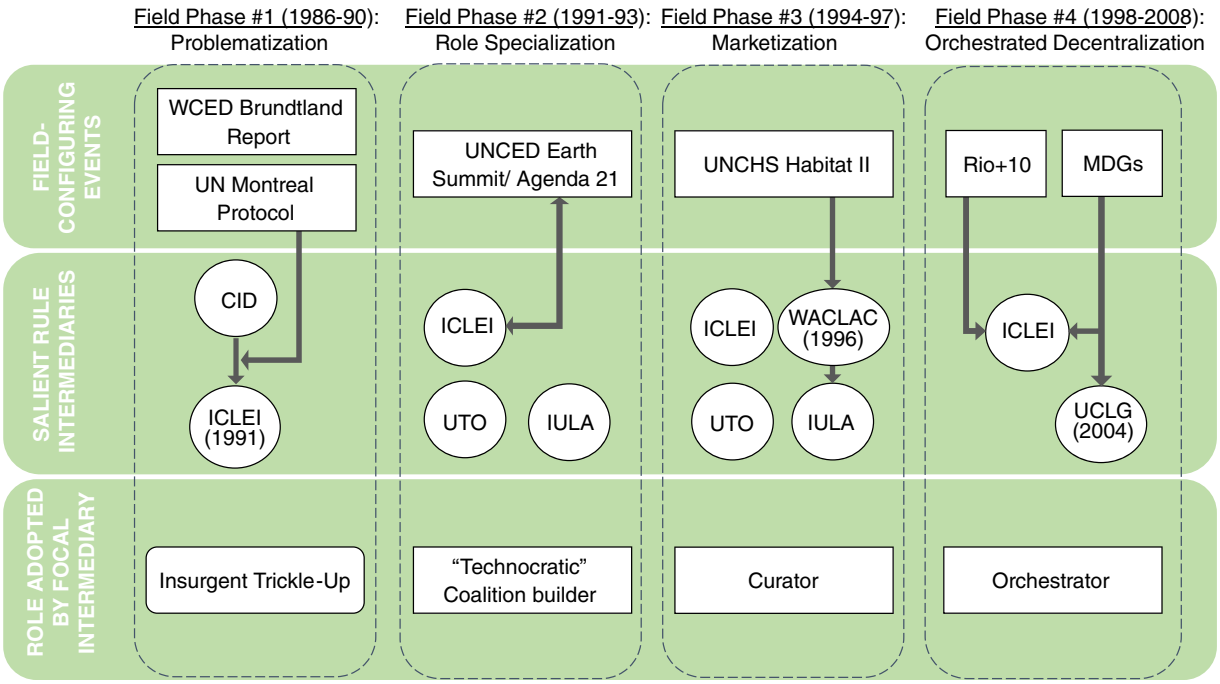

Figure 1 Field-configuring events and intermediary dynamics.

This push was supplemented by another field development in the same year. In 1987, the UN ratified the Montreal Protocol, a multilateral agreement designed to encourage phase-outs of ozone depleting substances. The Protocol originated from research in the late 1970s demonstrating the harmful effects of chlorofluorocarbons (CFCs) on the stratosphere. Notably, the protocol was the first environmental accord to be ratified by all members: proponents of the Protocol successfully framed ozone depletion as a particularly insidious tragedy of the commons that would have detrimental impacts on every constituent country. Cited by UN officials as "perhaps the single most successful international agreement to date," the Protocol was pivotal in highlighting the urgency of environmental issues (United Nations [UN] 2003).

Together, the ratification of the Montreal Protocol and the publication of the Brundtland Report opened a new policymaking role of cities: sustainable urban development became a necessary component for addressing a host of time-sensitive environmental issues (WCED 1987, p. 34). The need for cities to handle ozone depletion was particularly acute: the city of Irvine, California with a population of only 100,000 people was alone responsible for 0.25 percent of global chlorofluorocarbon (CFC) production. In addition, the Brundtland Report also specified the means for addressing these issues, through empowered local authorities as opposed to state-sponsored policies alone. In this manner, the field of sustainable urban development would feature some regulatory overlap with proximate fields but would also feature actors and initiatives distinct to the field itself. The problematization of cities as core to the ozone depletion emergency – as well as the projection of urban governance as a crucial pillar of the solution – proved instrumental to the emergence of the sustainable urban development regulatory field.

5.2. Rule-intermediary dynamics: The "Trickle-up Theory of Public Policy"

In the years preceding the Montreal Protocol and the Brundtland Report, a movement for local self-governance had begun in the US, spearheaded by an association named the Center for Innovative Diplomacy (CID). The association was formed in the early 1980s, founded on the belief "that local elected officials had the legitimacy, knowledge and the temperament to self-problem solve on a global scale."[3] In concert with the National League of Cities – the largest national association of American municipalities – the CID mobilized local authorities to pass resolutions on regulatory issues around a nuclear freeze and divestment from apartheid South Africa (Center for Innovative Diplomacy 1986). By circumventing federal policy though, these cities were branded by the federal government as "renegade local governments" (Agran 1989). The CID responded that municipalities were better

 © 2018 John Wiley & Sons Australia, Ltd

adapted to experiment with policy changes, arguing "some cities produce foreign policy strategies that make sense. A sprinkling of cities, and then more, copy them, until, at last, the federal government itself [sees] the wisdom of the new thinking" (Agran 1989, p. 4). In this "trickle-up theory of public policy," the CID adopted a role as a diffuser of "common-sense policies" among constituents.

The CID rapidly capitalized upon political momentum around sustainable development and ozone depletion as launching pads to push toward urban self-governance. Shortly after the Montreal Protocol was agreed, the association channeled the efforts of members to develop programs aimed at reducing CFCs:

> The signatory nations of the 1987 Montreal Protocol… now appear ready to phase out CFCs totally by century's end… But there is little chance that Washington, or Bonn or London or Moscow, will act as rapidly and decisively as many localities are ready to act. Considering that the ozone is breaking up much more quickly than many scientists or policy-makers anticipated… local officials are showing more prudence than impatience in acting on their own. (Sklansky 1989, p. 10)

The CID thus framed CFC phase-outs as effective through local action, the urgency of which justified bypassing national governments. The first city to do so was Irvine in July 1989 (Bailey 1989), followed by 30 other American municipalities (Labaeye 2010). The CID catalyzed this wave of CFC phase-outs, organizing a Stratospheric Protection Accord (SPA) conference in Irvine a few days after the law passed, attended by representatives from two dozen municipalities (Sklansky 1989). One organizer of the SPA noted: "[CID members] organized Canadian and American cities for the SPA, a kind of edgy declaration. They could have just called it an agreement but they said, 'A treaty on protecting the stratosphere.'"[4] Following the SPA, all attendant municipalities pledged to pass CFC phase-outs.

5.3. Role emergence: "Insurgent" trickle-up intermediation

By organizing the SPA, the CID orchestrated cities to collectively act in a rulemaking capacity, a process meant to facilitate involvement in global policymaking. Despite (or because of) this success, the CID mission of self-governance and trickle-up policymaking became controversial among various stakeholder groups. Federal officials reprimanded the CID for interfering with foreign policy, while sister city organizations and conservative local officials became concerned about progressive politics being introduced into their work.[5] In response, CID moved to support the creation of a distinct intermediary that could combine environmentalism and local self-governance, using the SPA as an anchoring event. Without promoting their affiliation, CID executives garnered support from constituent municipalities – as well as an endorsement from the United Nations Environment Programme (UNEP) – for a "World Congress of Local Governments for a Sustainable Future" held at the UN, with the participation of 200 local governments from 43 countries (ICLEI 1993). CID was involved only in a support capacity, as "an NGO [platform] for raising money."[6] At the congress, a charter was ratified for the creation of ICLEI, with the organization beginning operations in 1991. In a clear demonstration of the boundary-spanning nature of this intermediary, the first chairman noted that the mission of ICLEI was to "provide[s] the local government community with new capacity for strengthening democratic local governance… in the face of major challenges of environment and development" (ICLEI 1993, p. 3).

The creation of ICLEI – along with the sequence of events preceding it – reveals how a nascent regulatory field can occasion role formation by an intermediary (Meyer & Höllerer 2010). Sustainable urban development was a subset of an emerging field of sustainable development, although it became a field in its own right through a process of cooptation by proponents of local self-governance. The role played by ICLEI during this phase was one of "insurgent trickle-up," where the agendas of local governments were aggregated into one representative intermediary, tasked with directing influence on global sustainable development politics and bypassing federal apparatuses. This phase of ICLEI's history illustrates how, when boundaries of a new field are ill defined and the nature of the issue itself is being formed, an intermediary's role can also be constructed based on the agenda and intervention of intermediaries in proximate fields.

© 2018 John Wiley & Sons Australia, Ltd

6. Field Phase #2 (1991–1993): Specialization

6.1. (Local) Agenda 21

In 1992, the UN held a Conference on Environment and Development (UNCED) – commonly known as the Earth Summit – in Rio de Janeiro, Brazil to build upon the foundation established in the Brundtland Report (WCED 1987; UN Conference on Environment and Development [UNCED] 1992). Aside from adopting a binding Framework Convention on Climate Change (UNFCCC), UN members also agreed to a set of voluntary and nonbinding environmental principles named Agenda 21, ratified by 178 heads of state. Agenda 21 was pivotal as it was the first environmental report to specify roles for different actors: notably, it included a chapter entrenching the "participation and cooperation of local authorities [as] a determining factor in fulfilling [Agenda 21] objectives" (UNCED 1992). This "Local Agenda 21" (or LA21) proposed objectives toward improving information exchange between local governments, as well as partnerships among "relevant organs and organizations such as UNDP, UNCHS, UNEP, the World Bank, regional banks, IULA [etc.]" (UNCED 1992). In addition, the Report also included a chapter defining a role for the scientific and technological community in decisionmaking on the environment and development (UNCED 1992, p. 31.1). As such, the Earth Summit represented a critical juncture in the field of local sustainable development: multiple stakeholders agreed upon the issues and their scope, with an emphasis on division of tasks and specific roles. Agenda 21, in concert with the lengthy preparatory processes for the conference, served to catalyze a field shift away from problematization and toward specialization.

6.2. Rule-intermediary dynamics: Political divergence

At the time of the Earth Summit, the two largest international associations representing local authorities were the International Union of Local Authorities (IULA) and United Towns Organization (UTO). Despite having special consultancy status at major UN events (Bislev & Salskov-Iversen 2001), both entities had been absent from prior meetings on sustainable development. Nonetheless, they shared similar goals of facilitating interurban cooperation and promoting local self-governance, paralleling the role of the CID (by now, defunct). However, the two organizations were historically divided along Cold War ideological lines: IULA included North American and Western European municipalities and advocacy groups, while UTO membership was comprised primarily of socialist French municipalities and former Eastern Bloc cities. At UN events these divergent political views created friction regarding who truly represented local government. As one Earth Summit participant noted of this "competing and positioning" dynamic (Hom 2002, p. 254):

> IULA and UTO were duking it out over who was going to be the main voice of local government in a post-Cold War era… at the prepcoms for the Earth Summit, mayors from the two organizations would have a photo-op with the UN Secretary General, and then have side meetings and bicker with one another… This [conflict] made it very difficult to hold meetings.[7]

In parallel to the Earth Summit, thousands of civil society representatives participated in a Global Forum drafting 40 "alternative treaties." Non-governmental organizations (NGOs) were frustrated that they were relegated to consultative or observer status rather than viable implementers of sustainable development policy. One treaty, drafted by an NGO called Habitat International Coalition (HIC), was labeled "Towards Just Democratic and Sustainable Cities, Towns and Villages" and featured language mirroring LA21. The treaty was signed by 140 NGOs. As an Earth Summit participant from ICLEI noted:

> [Al]though they weren't able to sit in the working group meetings like we were – to negotiate and introduce language – I think the [NGOs] legitimately had the ear of people in the Secretariat and of certain governments, saying "you can't let these [local associations] kidnap our agenda."[8]

In this manner, the regulatory field of local sustainable development leading up to the Earth Summit was fragmented with competing actors and agendas. Collectively they were struggling to formalize their role in rule-making arenas in competition with national governments. However, given the immature and unstructured state of this emerging field, the key actors were divided along their political agendas and the roles of actors (such as ICLEI, IULA, UTO) were ill-defined, contested, and overlapped.

 © 2018 John Wiley & Sons Australia, Ltd

6.3. Role adoption: "Technocratic" trickle-up intermediation

The overarching field of sustainable development emerged, in part, through the Montreal Protocol and the framing of issues like ozone depletion as scientific rather than political problems. Politically aligned organizations like IULA and UTO faced resistance at the UN from the US and China who viewed local governance advocacy as potentially subversive to state authority (Brugmann 1990). ICLEI, on the other hand, adopted a technocratic approach better suited to address a field increasingly oriented toward technical solutions, making local governance more politically palatable. For instance, the organization emphasized technology for energy efficiency or design or streets, rather than policies of investment or procurement.[9] In other words, by "rendering technical" (Li 2011) the environmental issues, ICLEI succeeded in maintaining a less contested presence in the field compared to counterpart associations: "While IULA and UTO were duking it out… [We were] sitting at a desk with a little sign saying 'Local Authorities' working out relationships with different government delegations, introducing language into this chapter or that chapter."[10] This "technocratic" role allowed ICLEI to maneuver around the politics historically associated with local governance and engage in the drafting of LA21 and related chapters.

ICLEI members involved in the drafting of LA21 removed the name of ICLEI from the text, instead crediting the chapter to IULA and UTO (Hom 2002):

> In the end, the thing that had to be sacrificed so that [IULA and UTO] would not sabotage Local Agenda 21 was the name of ICLEI… there's this irony that ICLEI launched and led it worldwide, and came up with the concept as well-recognized, but our name isn't mentioned in it. It was a concession to them, you know.[11]

By adding both IULA and UTO as authors on LA21, ICLEI secured the endorsement of both associations, adding member localities from both Western and former Soviet countries (ICLEI 1993, 1996). However, given that neither association had any capabilities or expertise in sustainable development, ICLEI would become the default intermediary for assisting local governments in implementing LA21 (ICLEI *et al.* 1996). Following the Summit, ICLEI launched a core program for LA21 implementation, followed by numerous initiatives oriented toward technical support, training, and consulting on local environmental issues. Through these programs, 1,800 cities and towns adopted LA21 between 1992 and 1996, with ICLEI membership growing from 30 localities to 186 within the same timeframe (ICLEI 1996). As the secretary general of UNEP noted of ICLEI's involvement: "the leadership of the International Council for Local Environmental Initiatives… [on] global–local interaction is one of the most encouraging and promising developments to have occurred since and as a result of the Earth Summit… (Strong, 1997)"

This phase in ICLEI's history demonstrates how a process of field fragmentation can occur even in a relatively nascent field: actors with ostensible intermediation capacity enter the field and import their ideological divides into regulatory and governance debates. However, this fragmentation – combined with the specialization and scientization of the field – can also condition a transformation for the focal intermediary: ICLEI managed to complement the emphasis on local governance with a more technical role afforded by the growing prominence of ozone depletion. In doing so, the LGO managed to bypass the ideological conflicts and contestation of partner organizations and construct a coalition along seemingly uncontroversial technical capacity. In this way, the role adopted by the organization represents a pressure for consolidation in sustainable urban development – at least along technical concerns and implementation processes.

7. Field Phase #3 (1994–1997): Marketization

7.1. The Aalborg Charter and Habitat II

In the mid-1990s, two major international events were organized around local governance and sustainable development. The first was the 1994 European Conference on Sustainable Cities and Towns, a major gathering on urban sustainability held in Aalborg, Denmark and co-organized by the European Commission and the Danish government. The major outcome of this congress was the "Aalborg Charter," a reiteration of LA21 goals that included the necessity of self-governance to achieve these goals (City of Aalborg, ICLEI 1994). The event was the largest sustainable development meeting held in Europe up to that point; within a decade 1,600 municipalities

© 2018 John Wiley & Sons Australia, Ltd

adopted the Charter (and by extension, LA21) (Bulkeley *et al.* 2003). Aalborg thus represented an important juncture where LA21 became entrenched as the dominant norm in the field of sustainable urban development.

A second pivotal event was the 1996 UN-Habitat II Conference in Istanbul, a summit on human development following up from the Habitat I Conference two decades earlier. As at Rio in 1992, participants reiterated support of LA21 without references to self-governance or urban associations to avoid antagonizing the US and China (UN-Habitat 1996). However, the United Nations Human Settlements Programme (UNCHS) also pushed during the preparatory processes for a program to compete with LA21:

> One of the tussles in 1996 was that Habitat wanted to have something like Local Agenda 21, a big popular global program, so they pushed something called "Local Habitat Agendas" … So every time they read the language we put in, the next day the text would come back and, lo and behold, there was nothing about LA21.[12]

"Local Habitat Agendas" nonetheless failed to appear within the Habitat Agenda report; UN members including Sweden and the UK voted against the initiative, as they had already committed to a broad implementation of LA21 in Aalborg. In subsequent years, however, the Agenda produced a Global Urban Observatory (GUO) allowing "comparative international evaluation of progress in meeting the aims of the Habitat Agenda" (United Nations Human Settlements Programme [UNCHS] 1997, p. 7). Specifically, this included a program of 46 key urban indicators, designed to "monitor overall urban performance" (UNCHS 1997).

The events in Istanbul represent a process of marketization in the regulatory field (Reinecke *et al.* 2012), where actors produce distinct standards to compete with the dominant incumbent. Local Habitat Agenda represents a framework that competes with LA21 for legitimacy, one that is replete with programs for ranking and comparing RTs along certain criteria. In one sense, then, the emergence of these competing frameworks was a development that created competition among intermediaries in the regulatory field, reflecting a broader competition between different political coalitions. As Fransen (2011) has shown, conflicting agendas in these settings is structured in the guise of competing governance solutions leading to sustained fragmentation of the field.

7.2. Rule-intermediary dynamics: Consolidated competition

Paradoxically, although the process of marketization resulted in standards fragmentation, the resulting competitive pressures served to consolidate actors in competing coalitions within the field. IULA and UTO were absent from the formal preparatory committees of both the Aalborg conference and Habitat II (City of Aalborg, ICLEI 1994; UN-Habitat 1996), as they were "largely disoriented about the ins-and-outs, the politics, and the emerging diplomacy of local government in [these events]."[13] Instead, on the eve of the Habitat summit, they joined a parallel assembly held by local government associations to discuss the formation of a new intermediary association, one that could serve as a collective representative for constituent associations at UN fora (UNCHS and World Associations of Cities and Local Authorities Coordination [WACLAC] 2005). ICLEI, as a participant in the main conference, was not involved in the discussions. The assembly declaration gave rise to a new umbrella intermediary named the World Associations of Cities and Local Authorities Coordination (WACLAC), aggregated from IULA, UTO, and continental urban associations (Alger 2003, p. 99; Smith 2013). In its early years, the major goal of the organization was to create a Charter of Local Self-Government, an "internationally agreed, adaptable framework for the practice of local democracy…. To contribute to sustainable human and settlement development" (UNCHS and WACLAC 2005, p. 2). This focus on self-governance and the environment – along with the WACLAC's role as liaison with UNCHS – meant that the new organization would be competing directly with ICLEI as the "voice" of local governments at UN fora. In addition, WACLAC also encouraged the use of the competing Global Urban Observatory (GUO) program devised by UNCHS (UN-Habitat 1998, p. 13).

7.3. Role adoption: "Curator" trickle-up intermediation

Despite its early technocratic role, by 1996 ICLEI was openly critical regarding the use of GUO sustainability indicators and chose to withdraw from involvement in Habitat-II – this, despite the LGO being the only non-state member granted a participatory status equal to that of G77 members. The Secretary-General of ICLEI cited the failure of such indicators in Seattle (a Habitat II award winner but not an ICLEI member) while underscoring

 © 2018 John Wiley & Sons Australia, Ltd

the success of proper planning in Oregon and Santa Monica – both ICLEI members (ICLEI 1996; ICLEI *et al.* 1996; Brugmann 1997a). As stated by an informant:

> How do you develop a relatively standardized methodology for cities to do greenhouse gas accounting? Are you going to be ultra-scientific, are you going for comparability, or are you going to provide people with the information they need to change their outcomes locally? ICLEI was always biased towards the latter.[14]

ICLEI subsequently shifted away from its role as a technocratic organization involved in policymaking, instead becoming a "curator" of environmental best practices of member municipalities. The organization maintained the mandate of official representative of municipalities in global governance arenas, but this was complemented by the coordination of sustainable environmental policies and practices by those municipalities. New programs focused on this emerging intermediary role included an ICLEI Consultants program and ICLEI case studies designed to improve environmental performance (ICLEI 1996, 2000; Bulkeley 2006), while the European Secretariat drafted a 12-volume manual on good environmental practices (ICLEI 1996). This curating role was also facilitated by regulatory developments: Following the failure of the competing Local Habitat Agendas and frustrated by a lack of progress on the WACLAC Charter of Self-Governance, UN-Habitat opted to partner with ICLEI to launch a counterpart to the GUO program labeled The Best Practices and Local Leadership Program (BLP). This network was "dedicated to the identification and exchange of successful solutions for sustainable development, (UN-Habitat, 2018)" as a necessary complement to the diffusion of indicators. As a result of the new initiatives contained within these programs, 6,416 local governments in 113 countries had committed to LA21 by the end of the century (UN 2002; Brugmann 2007).

The role change of ICLEI during this phase is instructive regarding the effects of field change on a focal intermediary. By 1996, the regulatory field around sustainable urban development had become more competitive with the emergence of a competing standard (Local Habitat Agendas), as well as a powerful rival intermediary (WACLAC), the latter of which was powerful enough to attract and aggregate numerous other intermediaries under its umbrella. Partially as a result of this marketization and contestation dynamic – with the challenger adopting a similar technocratic role as the incumbent – ICLEI responded by shifting away from the more technical aspects of sustainable urban development. Instead, the LGO replaced this role with a "curator" role that was complementary to that of local governance representation and could leverage the activities of an established membership base. This process of differentiation was therefore not based on content of the standard (Reinecke *et al.* 2012), but rather opposition to the underlying idea of a technical standard. Consequently, the marketization in the field – and the consolidation of other intermediaries toward a technocratic standard – conditioned a role transformation of ICLEI from technocrat to curator, further bolstering its official "trickle-up" role as the representative of municipalities.

8. Field Phase #4 (1998–2008): Orchestrated decentralization

8.1. Millennium declaration and Rio + 10

In 2000, the UN convened a three-day general assembly to outline their role in the 21st century. The outcome of this meeting was the Millennium Declaration, a set of time-bound, measurable goals based on 21st century "fundamental values:" Freedom, Equality, Solidarity, Tolerance, Respect for Nature, and Shared Responsibility (UNGA 2002). In contrast to prior agreements that relied primarily on member states for implementation, the 2000 Declaration focused on galvanizing public support for its Millennium Development Goals (MDGs) through partnerships with other intergovernmental and civil society organizations (Abbott & Snidal 2013). The Declaration thus represented a shift at the UN – members recognized multistakeholder initiatives as drivers of change rather than state policies alone (Mena & Palazzo 2012). Numerous public and private initiatives subsequently emerged as a means of attaining the MDGs (Bäckstrand 2008), many of these involving local authorities as partners.

Two years after the Declaration, the UNEP convened a 2002 "Rio + 10" Summit in Johannesburg to re-affirm commitment to both Agenda 21 and the newer MDGs. In addition, participants produced a Johannesburg Plan of Implementation meant to spur action on sustainable development (UN 2002). Building upon the Millennium Declaration, the Summit emphasized a new type of partnership with civil society and private actors named "Type

© 2018 John Wiley & Sons Australia, Ltd

II," shifting away from more traditional "Type I" treaties between nation-states (Abbott & Snidal 2013). Over 300 partnership initiatives were crafted via this new arrangement among various parties at Johannesburg, many of which were oriented toward urban planning (Bäckstrand 2008). The Rio + 10 Summit represented a novel manner of pluralizing involvement in policy creation, a process that fragmented the field of sustainable urban development into a plethora of actors, standards, and initiatives.

8.2. Rule-intermediary dynamics: Actor consolidation

Against this backdrop of decentralization, a number of intermediaries in sustainable urban development were pressured toward consolidation by field developments. In 2001, the US and China blocked a draft of a World Charter of Local Self-Government (developed by IULA and WACLAC) from appearing on the agenda of the follow-up Habitat+5 conference (Smith 2013). Following this setback, IULA withdrew from WACLAC and held a "Unity Conference" along with UTO, subsequently leading to a merger in 2004 (Smith 2013). The consolidated organization – named United Cities and Local Governments (UCLG) – featured an expansive membership base with a continued mission toward decentralization and self-government. This new and more powerful organization, however, assumed a role as liaison between UN-Habitat and local authorities, with the ultimate intention of establishing a formal advisory role at UN events (UCLG 2005). The new organization also entered into areas that were previously within the jurisdiction of ICLEI: the UCLG declaration not only incorporated a commitment to sustainable development (UCLG 2004), but also adopted a UN-Habitat/UNESCO cultural development program named "Agenda 21 for Culture" that closely paralleled LA21 in structure (UCLG Committee on Culture 2004). In contrast to the trickle-up approach of ICLEI, UCLG adopted the role of a trickle-down intermediary, crafting programs explicitly based on RM initiatives: the first was a "Millennium Towns and Cities Campaign" that framed MDGs, such as social inclusion and race/gender equality, as necessary components of democratic local self-government (UNGA 2000; UCLG World Council 2005). The campaign, attracting over a thousand local authorities, cemented the relationship with UN-Habitat; however, this focus on one agency resulted in no further joint initiatives with other UN agencies until 2008.

8.3. Role transformation: "Orchestrator" trickle-up intermediation

In contrast to earlier meetings, ICLEI was not involved in the preparatory process of the MDGs, and the Rio + 10 declarations did not include a special chapter on sustainable development, as was the case with Agenda 21. Concerned about "LA21 fatigue" (Otto-Zimmermann 2002, p. 466), ICLEI's newly appointed secretary-general elected instead to focus on partnership building, co-organizing the largest parallel event of Rio + 10 with 900 participants from 69 countries. At this event, named the Local Government Session, ICLEI forged several Type II partnerships among private and public partners. One partnership with UNESCO and the newly established UN agency International Strategy for Disaster Reduction (ISDR) resulted in a "Resilient Cities and Communities" initiative to address issues of risk in urban areas (ICLEI 2003; UN–International Strategy for Disaster Reduction [ISDR] 2004). Further partnerships with private actors were targeted at addressing specific MDGs, resulting in programs such as the "Viable Local Economies" initiative to eradicate poverty (Otto-Zimmermann 2002). Therefore, as a response to the democratization of policymaking – and the accompanying fragmentation of standards and actors – ICLEI built platforms for promoting engagement among multiple stakeholders on a broad range of issues.

In orchestrating multiple partnerships, ICLEI also became involved in another role: as noted earlier, the Millennium Declaration and Rio + 10 featured limited involvement in policymaking by non-state representatives, with intermediaries specifically relegated to duties of diffusion and implementation. ICLEI fully assumed this role: all projects were subsumed under a new discourse of "Local *Action* 21" that focused on building connections among field actors rather than engaging in direct policymaking influence (Otto-Zimmermann 2002; ICLEI 2003). The role change was accompanied by a name change. In 2004, on the same day of the IULA-UTO merger, ICLEI modified its name and charter. The organization was re-styled as "ICLEI – Local Governments for Sustainability," maintaining the original acronym but dropping the title "International Council for Local Environmental Initiatives." In contrast to the initial moniker that indirectly promoted municipal governance *through* climate change, the inclusion of "local governments" was an overt signal of ICLEI's twofold mission of local

 © 2018 John Wiley & Sons Australia, Ltd

governance and environmentalism. In addition, the organization reoriented itself toward the broader issues of global sustainability, particularly with respect to social issues: poverty, injustice, exclusion, conflict, unhealthy environments, and insecurity.[19] Paralleling UCLG, ICLEI explicated the necessity of "connecting local action to internationally agreed upon goals and targets such as Agenda 21, the Rio Conventions, the Habitat Agenda, the Millennium Development Goals, and the Johannesburg Plan of implementation" (ICLEI 2003, p. 8). This "broader mandate to address sustainability issues" (ICLEI World Secretariat 2006) grew out of the partnerships built in Johannesburg, and through a widened portfolio of programs, the membership base of ICLEI grew at an unprecedented pace, tripling in size between 2004 and 2008.

The discourse surrounding ICLEI's role – and label – change indicate an organizational response to a process of field-level orchestrated decentralization (and consequent fragmentation). At Rio + 10, the UN created Type-II partnerships to develop multistakeholder initiatives that would ostensibly be better adapted to exploit the broad interest and resources available for informal, private, multistakeholder partnerships in sustainable development compared to hierarchical Type-I arrangements. The subsequent standards that emerged from these partnerships would naturally compete with incumbent standards, thus exacerbating the process of marketization (Andonova & Levy 2003; Mena & Palazzo 2012). However, at this point ICLEI had already rejected technical standards in favor of "curating" best practices, and thus did not directly compete with other standards. Nonetheless, these new partnerships conditioned a role shift: the LGO began complementing their portfolio of programs of best practices (such as the BLP), expanding toward an additional role of moderating and facilitating Type-II partnerships. This new role was also conditioned by other intermediaries: consolidation of peer organizations into one entity (UCLG) – as well as that organization's adoption of a formalized "trickle-down" intermediation role – influenced ICLEI to differentiate itself through a supporting "orchestrator" role, one that could leverage the LGO's existing membership base, partnerships, and influence in policymaking.

9. Discussion

Our case illustrates one possible set of responses by an RI to a regulatory field undergoing processes of structuration, as well as how it responds to the concomitant rise of other intermediaries. Our longitudinal analysis of this case aimed to show the contingencies involved, as the structure of a regulatory field affects the role of RIs within them. The case of ICLEI is, in other words, a "critical case" (Flyvbjerg 2006), that is, a counterpoint to some work on RIs presenting them as rational and highly agentic actors. The case of ICLEI instead illustrates how the rise or fall of RIs can be conditioned by a constellation of external political shocks, field-level events, and actions of regulators, peers, and targets. In the following sections, we discuss the ways field-level structures affected RIs in their path to gaining power and influence in the regulatory field. It is important to emphasize that the four field-level processes that we identify here are not presented as clean and well-demarcated phases across time and space. Rather, they are intertwined and heavily influence each other. While in each phase certain structuring processes that we highlight are more prominent as the "big waves" affecting the field, the other processes also continue to perform the field and the role of RIs within it.

Our case analysis leads to possibilities and questions about the role of officialization and "mandate" in regulatory intermediation (Mena *et al.* 2018). ICLEI started with the official mandate of representing municipalities in global rulemaking arenas and coordinating among its member base. As shown, in response to changing field structures it increasingly adopted emergent, complementary trickle-up roles wherein it would coordinate and facilitate the translation of environmental policies from its membership base toward RMs. This case shows how plays between official and unofficial trickle-up mandates are crucial to weathering changing field-level conditions.

9.1. Alternative routes to field structuration and the impact on rule-intermediary roles

Our account of ICLEI theorizes diverse processes of field formation and evolution while illustrating how each may affect the role of RIs as they adapt to such changes. We discuss how four processes contributed to consolidation and fragmentation of the sustainable urban development field: problematization, specialization, marketization, and orchestrated decentralization.

© 2018 John Wiley & Sons Australia, Ltd

The "problematization" that we identify in our case is a field-level coalescence process entailing collective mobilization of actors (regulators, intermediaries, and other private parties) from proximate fields to define the agenda of a new regulatory field. Such mobilization, in our case, derives from shifts in regulatory policymaking and emerging problem spaces that help to structure a "governance gap" (Quack 2009). This void offers a space for a new regulatory field where RIs can emerge, with support from various powerful constituencies ranging from national (in this case, municipal) actors to transnational regulators. This dynamic of consolidating interests appears highly enduring; the actors involved not only set the normative orientation and agenda but also anchor certain "rules of the game" (Djelic & Quack 2003) in sustainable urban development. Field formation processes like problematization are highly consequential for the rise and roles of RIs. In the case of ICLEI, this nascent role was one of de facto local representation of municipalities seeking to produce "trickle-up" influence in global policymaking. ICLEI was, in other words, an RI structured and officialized by local actors to coordinate the localities and to influence global sustainable development politics – to act as representative rather than regulator.

Another driver for field structuration is role specialization. When rapid institutionalization and expansion occur, new actors begin populating the field (Meyer *et al.* 1997), many of which move from proximate fields; this growth gives regulators the opportunity to orchestrate the field and enroll different actors according to their expertise (the scientific community, other transnational entities, private entities, etc.). In its trickle-up capacity, ICLEI was involved in influencing rulemaking (by writing LA21) to carve out a formalized role for local government participation – and by extension, for organizations like itself. To avoid contestation from national governments and also competing actors from the urban regulatory field, ICLEI projected itself as a "technical" actor (Li 2011), complementing the political roots as an insurgent local intermediary with a seemingly apolitical role as "technocratic" coalition builder. This phase also indicates how such specialization is a process of "co-opetition" (Djelic 2011b) that settles field actors. Fransen (2011) illustrates a similar dynamic in the garment manufacturing sector, where diverse coalitions can find a way to coexist with each other, creating durable regulatory ecosystems within the same regulatory field.

As the field further expands in terms of network, resources, and political opportunities, marketization occurs with competitors emerging to challenge incumbents in order to gain legitimacy or resources, for example, access to regulators (Buthe 2010; Reinecke et al. 2012). In the case of ICLEI, challengers like WACLAC contested existing standards (LA21) while championing their own alternative standards (Local Habitat Agendas). The focus of these challengers was on creating exclusive relations with influential regulators, constructing a "competitive advantage" for the RI by offering better competing standards. In another "chameleonic shift" (Havinga & Verbruggen 2017) ICLEI responded to this competition by repositioning itself as the facilitator for adoption of the best practices as recommended by RTs – a role which we label "curator" – leveraging its membership base to create differentiation from the technical standards prevalent in the field.

The fourth crucial driver for field structuration that we observe is the push to decentralize regulatory roles from standard setters toward private parties. As with many other fields, such orchestrated decentralization was triggered by a discourse of democratization in addition to rising critiques of RMs, their modes of operation, and political sidings. ICLEI's "Local Government session" at the Rio + 10 conference led to the emergence of hundreds of local programs framed as "Type II" partnerships. While orchestration is frequently in the hands of regulators such as the UN (Abbott *et al.* 2015), in our case, ICLEI took advantage of the new partnership format to adopt an "orchestrator" role itself. By organizing this event, ICLEI entrenched itself as a nexus for diverse regulatory processes. What this case shows is that such decentralization and privatization – as represented in the proliferation of "Type II" partnerships – can result at the same time in decentralization of power but also the rise of new centers of power and knowledge.

Field structuration can, in other words, be driven by problematization, role specialization, marketization, and orchestrated decentralization. These intertwined and mutually constitutive processes have different outcomes for the field. As shown, ICLEI had diverse reactions to these processes. It expanded and/or limited its roles, it highlighted or hid its roles in different coalitions, it outcompeted competing RIs and it weathered field changes by repositioning itself in the regulatory field in an expanding orchestration role. These processes show that we cannot study RIs, their rise, structuring, maintenance, and demise without attending to processes that influence field-level structures. We believe the four fragmentation/consolidation processes that we identified here can prove useful in analysis of the regulatory field-level dynamics in other areas and the role of specific RIs within them.

 © 2018 John Wiley & Sons Australia, Ltd

Acknowledgments

The authors would like to thank Jeb Brugmann for his invaluable help in providing archival material regarding the emergence and development of ICLEI, as well as his feedback on an earlier draft.

Notes

1 Appendix II provides a list of key actors and abbreviations involved in the rise of ICLEI.
2 Our preference for this term compared to "regulatory markets" can be attributed to the fact that, while we believe market-based organizing is a crucial feature of all contemporary regulatory processes, this term does not have full explanatory power to help imagine the diverse modes of organization at play.
3 Informant #2.
4 Informant #1.
5 Informant #2.
6 Informant #1.
7 Informant #3.
8 Informant #1.
9 Informant #2.
10 Informant #1.
11 Informant #2.
12 Informant #3.
13 Informant #1.
14 Informant #1.

References

Abbott KW (2014) Strengthening the Transnational Regime Complex for Climate Change. *Transnational Environmental Law* 3, 57–88.
Abbott KW, Genschel P, Snidal D, Zangl B (2015) Orchestration: Global governance through intermediaries. In: *International Organizations as Orchestrators*, pp. 3–36. Cambridge University Press, Cambridge.
Abbott KW, Levi-Faur D, Snidal D (2017a) Introducing regulatory intermediaries. *The ANNALS of the American Academy of Political and Social Science* 670, 6–13.
Abbott KW, Levi-Faur D, Snidal D (2017b) Theorizing Regulatory Intermediaries: The RIT Model. *The ANNALS of the American Academy of Political and Social Science* 670, 14–35.
Abbott KW, Levi-Faur D, Snidal D (2017c) Enriching the RIT Framework. *The ANNALS of the American Academy of Political and Social Science* 670, 280–288.
Abbott KW, Snidal D (2013) Taking Responsive Regulation Transnational: Strategies for International Organizations. *Regulation & Governance* 7, 95–113.
Agran L (1989) The Trickle-up Theory. *Bulletin of Municipal Foreign Policy* 3(3), 4. [Last accessed 28 August 2018.] Available from URL: https://escholarship.org/uc/item/2t11z54g.
Alger CF (1990) Grass-Roots Perspectives on Global Policies for Development. *Journal of Peace Research* 27, 155–168.
Alger CF (2003) Searching for Democratic Potential in Emerging Global Governance. In: Morrison B (ed) *Transnational Democracy in Critical and Comparative Perspective: Democracy's Range Reconsidered*, pp. 87–106. Ashgate Publishing Limited, Aldershot.
Andonova LB, Levy MA (2003) Franchising Global Governance: Making Sense of the Johannesburg Type II Partnerships. *Yearbook of International Co-operation on Environment and Development* January, 19–32.
Auld G, Renckens S (2017) Rule-making feedbacks through intermediation and evaluation in transnational private governance. *The ANNALS of the American Academy of Political and Social Science* 670, 93–111.
Bäckstrand K (2008) Accountability of Networked Climate Governance: The Rise of Transnational Climate Partnerships. *Global Environmental Politics* 8, 74–102.
Bailey E (1989). Civic Leaders Launch Effort to Save Ozone: Inability of Nations to Stem Growing Crisis Spurs Action by Delegates at Irvine Conference. *Los Angeles Times*, 22 July. Available from URL: http://articles.latimes.com/1989-07-22/news/mn-3434_1_ozone-layer
Bartley T (2007) Institutional Emergence in an Era of Globalization: The Rise of Transnational Private Regulation of Labor and Environmental Conditions. *American Journal of Sociology* 113, 297–351.
Bislev S, Salskov-Iversen D. 2001. Globalization and Discursive Regulation: New Public Management. Paper presented at *16e Nordiska Företagsekonomiska Ämneskonferensen*, 16–18 Aug 2001, Uppsala: pp. 1–20.

© 2018 John Wiley & Sons Australia, Ltd

Boli J (2006) The Rationalization of Virtue and Virtuosity in World Society. In: Djelic M-L, Sahlin-Andersson K (eds) *Transnational Governance: Institutional Dynamics of Regulation*, pp. 85–115. CUP, Cambridge, UK.
Bothello J, Salles-Djelic M-L (2017) Evolving Conceptualizations of Organizational Environmentalism: A Path Generation Account. *Organization Studies* 39, 93–119.
Brugmann J (1990) Re: Local Agenda 21, a Project of ICLEI Founded on September 8, 1990 at the UN in New York, ICLEI, Toronto, ON.
Brugmann J (1994) Who Can Deliver Sustainability? Municipal Reform and the Sustainable Development Mandate. *Third World Planning Review* 16, 129–147.
Brugmann J (1997a) Sustainability Indicators Revisited: Getting from Political Objectives to Performance Outcomes—A Response to Graham Pinfield. *Local Environment* 2, 299–302.
Brugmann J (1997b) Is There a Method in Our Measurement? The Use of Indicators in Local Sustainable Development Planning. *Local Environment* 2, 58–72.
Brugmann J (2007) Locating the 'Local Agenda:' Preserving Public Interest in the Evolving Urban World. In: Marcotullio PJ, McGranahan G (eds) *Scaling Urban Environmental Challenges: From Local to Global and Back*, pp. 331–354. Earthscan, London.
Bulkeley H (2006) Urban Sustainability: Learning from Best Practice? *Environment and Planning A* 38, 1029–1044.
Bulkeley H, Betsill M (2005) Rethinking Sustainable Cities: Multilevel Governance and the 'Urban' Politics of Climate Change. *Environmental Politics* 14, 42–63.
Bulkeley H, Davies A, Evans B, Gibbs D, Kern K, Theobald K (2003) Environmental Governance and Transnational Municipal Networks in Europe. *Journal of Environmental Policy & Planning* 5, 235–254.
Buthe T (2010) Private Regulation in the Global Economy: A (P)Review. *Business and Politics* 12(3), 1–38.
Center for Innovative Diplomacy (1986) Why Cities are Entering International Affairs: An Overview. *Bulletin of Municipal Foreign Policy* 1(1), 3–4. Available from URL: https://escholarship.org/uc/item/4m83g304.
City of Aalborg, ICLEI (1994) Charter of European Cities & Towns Towards Sustainability, 27 May 1994, Aalborg, Denmark.
Climate-KIC. 2017. *Gold Standard for Sustainable Urban Development Requirements.* EIT Climate-KIC, Geneva.
Dingwerth K, Pattberg P (2009) World Politics and Organizational Fields: The Case of Transnational Sustainability Governance. *European Journal of International Relations* 15, 707–743.
Djelic M-L (2011a) International Competition Network. In: Hale T, Held D (eds) *Handbook of Transnational Governance - Institutions and Innovations*, pp. 80–88. Polity Press, Cambridge, UK.
Djelic M-L (2011b) From the Rule of Law to the Law of Rules: The Dynamics of Transnational Governance and their Local Impact. *International Studies of Management & Organization* 41(1), 35–61.
Djelic M-L, Quack S e (2003) *Globalization and Institutions: Redefining the Rules of the Economic Game*. Edward Elgar, London.
Djelic M-L, Sahlin-Andersson K (2005) Introduction: A World of Governance: The Rise of Transnational Regulation. *Transnational Governance: Institutional Dynamics of Regulation*, pp. 1–30. CUP, Cambridge.
Djelic M-L (2006) Marketization: From Intellectual Agenda to Global Policy-making. In: Djelic M-L, Sahlin-Andersson K (eds) *Transnational Governance*, pp. 53–73. CUP, Cambridge.
Djelic M-L, Sahlin-Andersson K (2006) *Transnational Governance: Institutional Dynamics of Regulation*. CUP, Cambridge, UK.
Drori GS, Meyer JW, Hwang H (2006) *Globalization and Organization: World Society and Organizational Change*. OUP, Oxford.
Eckerberg K, Forsberg B (1998) Implementing agenda 21 in Local Government: The Swedish Experience. *Local Environment* 3, 333–347.
Emirbayer M, Mische A (1998) What Is Agency? *American Journal of Sociology* 103, 962–1023.
Erdmenger C, Dette B, Otto-Zimmermann K (1997) Local Environmental Budgeting: The Controlling Instrument for the Sustainable Development of Local Authorities. ICLEI, Freiburg, Germany, January.
Flyvbjerg B (2006) Five Misunderstandings about Case-study Research. *Qualitative Inquiry* 12, 219–245.
Fransen L (2011) Why Do Private Governance Organizations Not Converge? A Political-Institutional Analysis of Transnational Labor Standards Regulation. *Governance* 24, 359–387.
Geertz C (1983) *Thick Description: Toward an Interpretive Theory of Culture*. Basic Books, New York.
Gulbrandsen LH (2008) Accountability Arrangements in Non-state Standards Organizations: Instrumental Design and Imitation. *Organization* 15, 563–583.
Guler I, Guillén MF, Macpherson JM (2002) Global Competition, Institutions, and the Diffusion of Organizational Practices: The International Spread of ISO 9000 Quality Certificates. *Administrative Science Quarterly* 47, 207–232.
Hardin G (1968) The Tragedy of the Commons. *Science* 162, 1243–1248.
Hardy C, Maguire S (2010) Discourse, Field-configuring Events, and Change in Organizations and Institutional Fields: Narratives of DDT and the Stockholm Convention. *Academy of Management Journal* 53, 1365–1392.
Havinga T, Verbruggen P (2017) Understanding Complex Governance Relationships in Food Safety Regulation: The RIT Model as a Theoretical Lens. *The ANNALS of the American Academy of Political and Social Science* 670(1), 58–77.
Hom L (2002) The Making of Local Agenda 21: An Interview with Jeb Brugmann. *Local Environment* 7, 251–256.
ICLEI (International Council for Local Environmental Initiatives/Local Governments for Sustainability) (1993) *Bi-Annual Report*. Toronto, ON. [Last accessed 28 August 2018.] Available from URL: http://archive.iclei.org/documents/Global/Biennial91-93.pdf
ICLEI (1996) *ICLEI Biennial Report : May 1993–July 1995.* Toronto, ON.
ICLEI (2000) *ICLEI 10th Anniversary Biennial Report.* ICLEI, Toronto, ON.
ICLEI (2003) *2003 Triennial Report.* ICLEI, Toronto, ON.

 © 2018 John Wiley & Sons Australia, Ltd

ICLEI, IDRC (International Development Research Centre), UNEP (United Nations Environment Programme) (1996) *The Local Agenda 21 Planning Guide*. IDRC, Toronto, ON.
ICLEI World Secretariat (2006) *Local Governments for Sustainability Charter and By-Laws*. ICLEI, Toronto, ON.
Kaufman L, Zernike K (2012, February 3). Activists Fight Green Projects, Seeing U.N. Plot, *New York Times*, 3 Feb Roanoke, VA. Available from URL: https://www.nytimes.com/2012/02/04/us/activists-fight-green-projects-seeing-un-plot.html
Koenig-Archibugi M, Macdonald K (2017) The Role of Beneficiaries in Transnational Regulatory Processes. *The ANNALS of the American Academy of Political and Social Science* 670(1), 36–57.
Labaeye A. 2010. *ICLEI and Global Climate Change: A Local Governments' Organizational Attempt to Reframe the Problem of Global Environmental Change.* Institut d'Etudes Politiques de Grenoble, Grenoble, France.
Lafferty WM, Eckerberg K e (2013) *From the Earth Summit to Local Agenda 21: Working Towards Sustainable Development*. Routledge, New York.
Lampel J, Meyer AD (2008) Field-Configuring Events as Structuring Mechanisms: How Conferences, Ceremonies, and Trade Shows Constitute New Technologies, Industries, and Markets. *Journal of Management Studies* 45, 1025–1035.
Langley A (1999) Strategies for Theorizing from Process Data. *Academy of Management Review* 24, 691–710.
Leffel B (2017) Rebirth of the Municipal Foreign Policy Movement. *CPD Blog*. [Last accessed 28 August 2018.] Available From URL: https://uscpublicdiplomacy.org/blog/rebirth-municipal-foreign-policy-movement
Levi-Faur D, Jordana J (2005) Preface: The Making of a New Regulatory Order. *The ANNALS of the American Academy of Political and Social Science* 598, 6–9.
Levi-Faur D, Starobin SM. 2014. *Transnational Politics and Policy: From Two-Way to Three-Way Interactions.* Jerusalem Papers in Regulation and Governance, Paper No 62.
Li TM (2011) Rendering Society Technical: Government through Community and Ethnographic Turn at the World Bank in Indonesia. In: Morse D (ed) *Adventures in Aidland: The Anthropology of Professionals in International Development*, pp. 57–79. Berghahn Books, New York.
Mair J, Marti I, Ventresca MJ (2012) Building Inclusive Markets in Rural Bangladesh: How Intermediaries Work Institutional Voids. *Academy of Management Journal* 55, 819–850.
Mehrpouya A, Djelic M-L (2014) Transparency: From Enlightenment to Neoliberalism or When a Norm of Liberation Becomes a Tool of Governing (September 1, 2014). HEC Paris Research Paper No. ACC-2014-1059. [Last accessed 28 August 2018.] Available from URL: https://ssrn.com/abstract=2499402
Mena S, Bres L, Salles-Djelic M-L (2018) Exploring the Formal and Informal Roles of Regulatory Intermediaries in Transnational Multi-stakeholder Regulation. *Regulation & Governance* forthcoming.
Mena S, Palazzo G (2012) Input and Output Legitimacy of Multi-stakeholder Initiatives. *Business Ethics Quarterly* 22, 527–556.
Meyer JW, Frank DJ, Hironaka A, Schofer E, Tuma NB (1997) The Structuring of a World Environmental Regime, 1870–1990. *International Organization* 51, 623–651.
Meyer RE, Höllerer MA (2010) Meaning Structures in a Contested Issue Field: A Topographic Map of Shareholder Value in Austria. *Academy of Management Journal* 53, 1241–1262.
Otto-Zimmermann K (2002) Local Action 21: Motto-Mandate-Movement in the Post-Johannesburg Decade. *Local Environment* 7, 465–469.
Otto-Zimmermann K (2006) Local Solutions for Global Challenges. *Local Environment* 11, 1–5.
Quack S (2009) Law, Expertise and Legitimacy in Transnational Economic Governance: An Introduction. *Socio-Economic Review* 8, 3–16.
Reinecke J, Manning S, von Hagen O (2012) The Emergence of a Standards Market: Multiplicity of Sustainability Standards in the Global Coffee Industry. *Organization Studies* 33, 791–814.
Siggelkow N (2007) Persuasion with Case Studies. *Academy of Management Journal* 50, 20–24.
Sklansky J (1989) CFCs' Days are Numbered. *Bulletin of Municipal Foreign Policy* 3(4), 8–12. [Last accessed 28 August 2018.] Available from URL: https://escholarship.org/uc/item/2t11z54g
Smith J (2013) From IULA to UCLG - My Odyssey. [Last accessed 28 August 2018.] Available from URL: http://www.rabat2013.uclg.org/sites/default/files/8.1.jeremy_smith_completo_eng.pdf
Strong M (1997) A new generation of alliances. [Last accessed 28 August 2018.] Available from URL: http://www.mauricestrong.net/index.php/speeches-remarks3/81-role-of-private-sector
UCLG (United Cities and Local Governments) (2004) *Founding Congress Final Declaration: Cities, Local Governments; the Future for Development*, 5 May 2004, Paris.
UCLG (2005). UCLG Millennium Towns and Cities Campaign Achieves Critical Mass Ahead of United Nations' Summit. *PR Newswire*, 6 Sep. Barcelona.
UCLG (2010) *The City of 2030 - Our Manifesto*. 16–21 Nov 2010, Mexico City.
UCLG Committee on Culture (2004) *Agenda 21 for Culture.* 8 May 2004, Barcelona.
UCLG World Council (2005) *Local Government Millennium Declaration*. March 2005, Beijing.
UN (United Nations) (2002) *Report of the World Summit on Sustainable Development.* New York.
UN (2003) *International Day for the Preservation of the Ozone Layer*. [Last accessed: 5 May 2017.] Available from URL: http://www.un.org/en/events/ozoneday/background.shtml
UNCED (United Nations Conference on Environment and Development) (1992) *Agenda 21*. 3-14 June 1992, Rio de Janeiro.
UNCHS (United Nations Human Settlements Programme) (1997) *Monitoring Human Settlements with Urban Indicators.* 25 May, Nairobi.
UNCHS & WACLAC (World Associations of Cities and Local Authorities Coordination) (1998) *Towards a World Charter of Local Self-Government.* Nairobi. [Last accessed 28 August 2018.] Available from URL: http://www.gdrc.org/uem/mea/local-charter/charter.html

© 2018 John Wiley & Sons Australia, Ltd

UNGA (United Nations General Assembly) (1983) *Process of Preparation of the Environmental Perspective to the Year 2000 and Beyond (A/RES/38/161).* New York.
UNGA (2000) *United Nations Millennium Declaration - A/RES/55/2.* New York.
UNGA (2002) *Environment and Sustainable Development: Implementation of Agenda 21 and the Programme for the Further Implementation of Agenda 21 (A/57/532).* Johannesburg, South Africa.
UN-Habitat (1996) *Report of the United Nations Conference on Human Settlements (Habitat II)*, A/CONF.165, 3–14 June, Istanbul.
UN-Habitat (1998) *Implementation of the Habitat Agenda: Guide for Local Authorities and their Associations*. Nairobi, UN-Habitat.
UN-Habitat (2018) Best Practices. [Last accessed 28 August 2018.] Available from URL: https://unhabitat.org/urban-knowledge/best-practices/
UNISDR (United Nations International Strategy for Disaster Reduction) (2004) *Living with Risk: A Global Review of Disaster Reduction Initiatives.* UNISDR, Geneva.
van der Heijden J (2017) Brighter and Darker Sides of Intermediation: Target-oriented and Self-interested Intermediaries in the Regulatory Governance of Buildings. *The ANNALS of the American Academy of Political and Social Science* 670, 207–224.
Ventresca MJ, Mohr JW (2002) Archival Research Methods. In: Baum JAC (ed) *The Blackwell Companion to Organizations*, pp. 805–828. Wiley-Blackwell, Hoboken, NJ.
WCED (World Commission on Environment and Development) (1987) *Our Common Future*. OUP, Oxford.
Yin RK (2013) *Case Study Research: Design and Methods*. SAGE, Thousand Oaks, CA.

 © 2018 John Wiley & Sons Australia, Ltd

APPENDIX I

Archival sources

Field Phase	ICLEI Organizational Documents	Rule-maker Documents	Rule-intermediary Documents	ICLEI Academic Publications
#1 Problematization (1986–1990)	Personal correspondence between Brugmann and Maurice Strong (1989)	Preparation of the Environmental Perspective to the Year 2000 and Beyond (A/RES/38/161)	Center for Innovative Diplomacy Reports (1985–1988)	
	ICLEI Charter (1990)	WCED Our Common Future (1987)	Bulletins of Municipal Foreign Policy (1986–1990)	Alger (1990)
		Montreal Protocol (1987)		
#2 Role Specialization (1991–1993)	ICLEI Bi-Annual Report (1993)	(Local) Agenda 21 (1992) UNFCCC (1992)	IULA World Declaration of Local Self-Government (1993)	
#3 Marketization (1994–1997)	Sustainable Cities and Towns Campaign (1994)	The Aalborg Charter (1994)		
	ICLEI Biennial Report (1995)	UN Conference on Human Settlements – Report A/CONF.165 (1996)	IULA - A Framework for Action in Municipal International Cooperation (1996)	Brugmann (1994)
	The Local Agenda 21 Planning Guide (1996)	UNCHS - Monitoring Human Settlements with Urban Indicators (1997)	IULA - Trilateral Municipal Cooperation (1996)	Brugmann (1997a, 1997b)
#4 Orchestrated Decentralization (1998–2008)	ICLEI 10th Anniversary Biennial Report (2000)	UN-Habitat - Implementation of the Habitat Agenda (1998)	WACLAC - Towards a World Charter of Local Self-Government (1998)	Erdmenger *et al.* (1997)
	ICLEI Revised Charter (2000)	UN Millennium Declaration - A/RES/55/2 (2000)	UTO - Europe-Central America Decentralized Cooperation Program (2000)	
	Prepcom I: Statement by Local Authorities (2001)	Report of the WSSD - A/RES/64/236 (2002)	WACLAC II Declaration (2001)	
	ICLEI European Circular (2002)	Living with risk: A global review of disaster reduction initiatives (2004)	UCLG Founding Congress Final Declaration (2004)	Otto-Zimmermann (2002)
	ICLEI Triennial Report (2003)	Agreement of Cooperation between UNCHS and UCLG (2004)		Hom (2002)
	Local Governments for Sustainability Charter and By-Laws (2006)		UCLG - Agenda 21 for Culture (2004)	Otto-Zimmerman (2006)
	Resilience Communities & Cities Initiative (2007)		UCLG Local Government Millennium Declaration (2005)	Brugmann (2007)

© 2018 John Wiley & Sons Australia, Ltd

APPENDIX II

List of relevant organizations and events

BLP	Best Practices and Local Leadership Program
CID	Center for Innovative Diplomacy
GUO	Global Urban Observatory
HIC	Habitat International Coalition
ICLEI	International Council for Local Environmental Initiatives/Local Governments for Sustainability
IDRC	International Development Research Center
IULA	International Union of Local Authorities
LA21	Local Agenda 21
LGO	Local Government Organization
MDG	Millennium Development Goals
NLC	National League of Cities
OECD	Organization for Economic Cooperation and Development
SPA	Stratospheric Protection Accord
UCLG	United Cities and Local Governments
UNCED	United Nations Conference on Environment and Development (aka the "Rio Summit")
UNCHS/UN-Habitat	United Nations Human Settlements Programme
UNDP	United Nations Development Programme
UNEP	United Nations Environment Programme
UNESCO	United Nations Educational, Scientific and Cultural Organization
UNFCCC	United Nations Framework Convention on Climate Change
(UN)ISDR	United Nations International Strategy for Disaster Reduction
UTO	United Towns Organization
WACLAC	World Associations of Cities and Local Authorities Coordination
WCED	World Commission on Environment and Development

© 2018 John Wiley & Sons Australia, Ltd