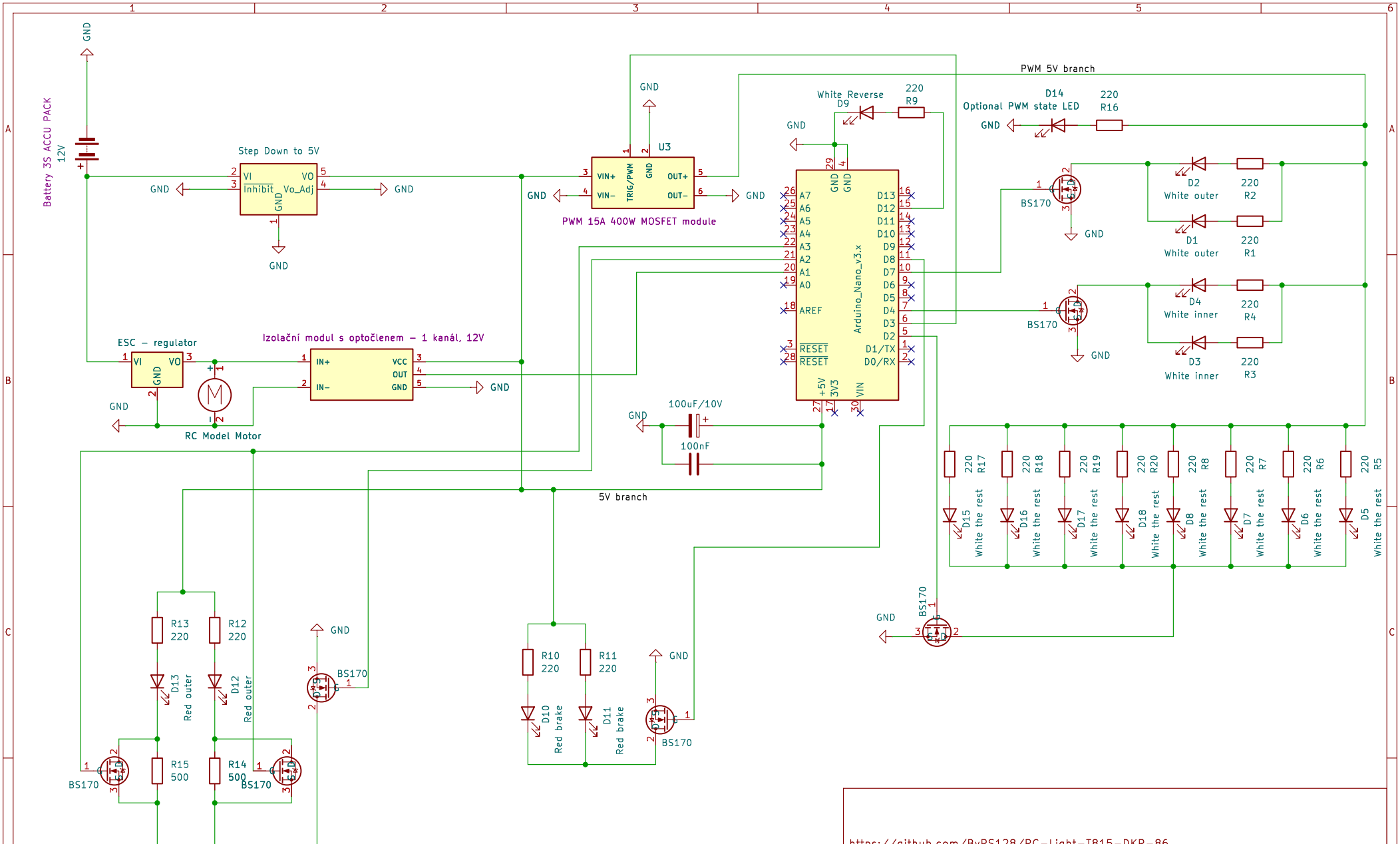

https://github.com/ByPS128/RC-Light-T815-DKR-86

Petr Škaloud

Sheet: /

File: T815-DKR-86-Schema.kicad_sch

Title: Lighting module for RC Tatra T815 Dakar 1986

Size: A4	Date: 2024-07-17	**Rev: 2**
KiCad E.D.A. 8.0.2		Id: 1/1