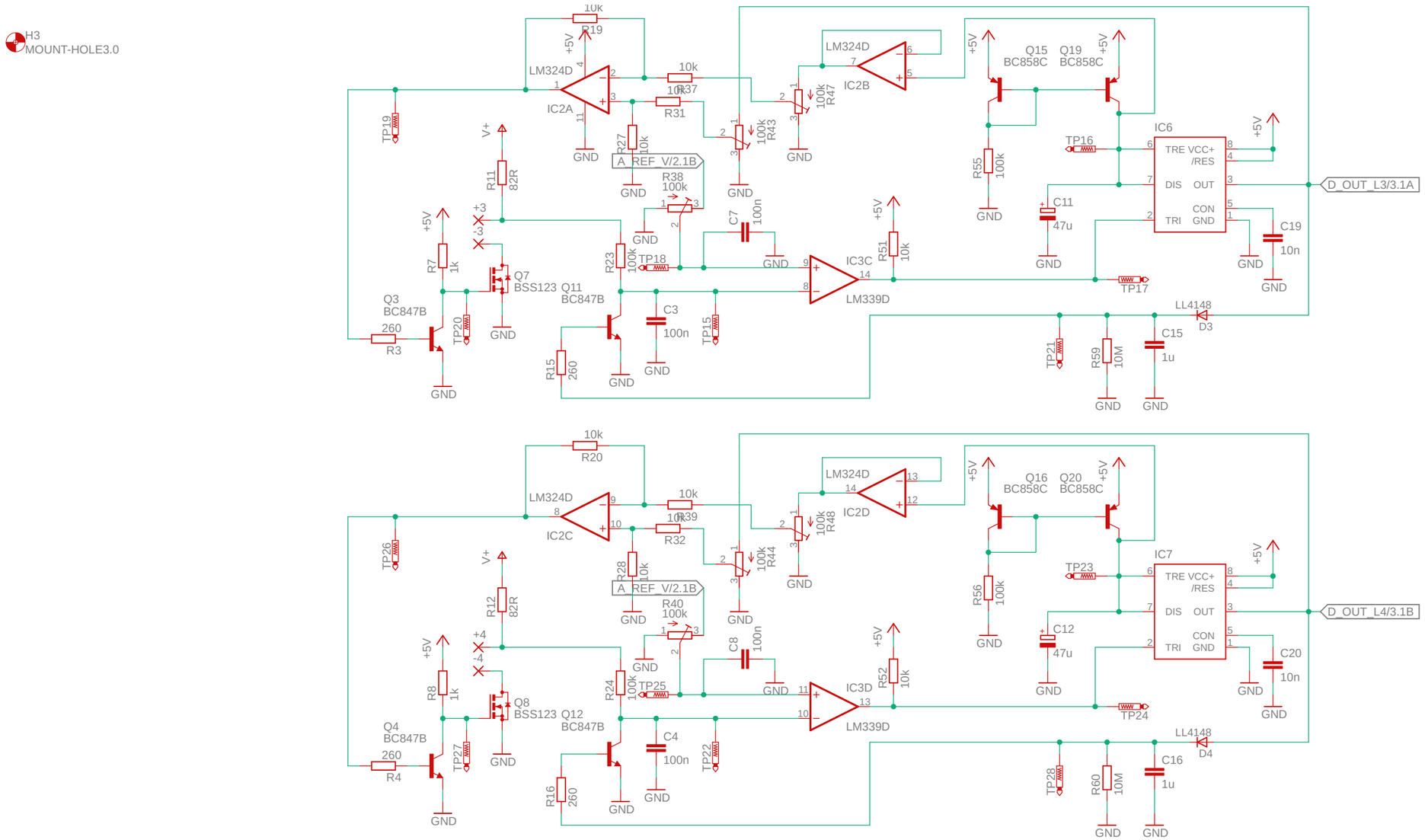
H3
MOUNT-HOLE3.0
LM324D
IC2A
IC2B
IC2C
IC2D
IC3C
IC3D
LM339D
IC6
IC7
Q15 BC858C
Q19 BC858C
Q16 BC858C
Q20 BC858C
Q3 BC847B
Q4 BC847B
Q11 BC847B
Q12 BC847B
Q7 BSS123
Q8 BSS123
D_OUT_L3/3.1A
D_OUT_L4/3.1B
A_REF_V/2.1B
LL4148
D3
D4
+5V
V+
GND

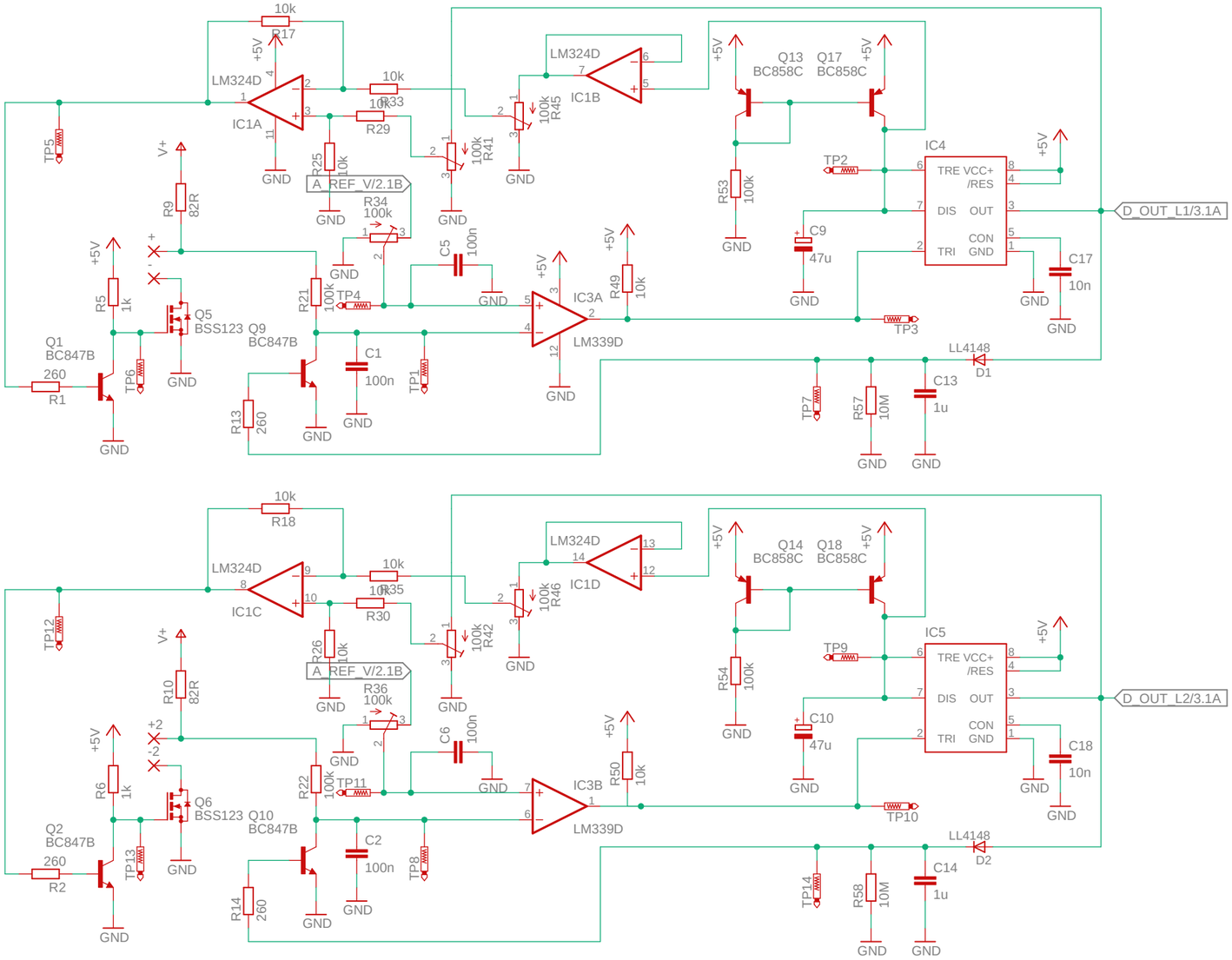

H1
MOUNT-HOLE3.0

H2
MOUNT-HOLE3.0

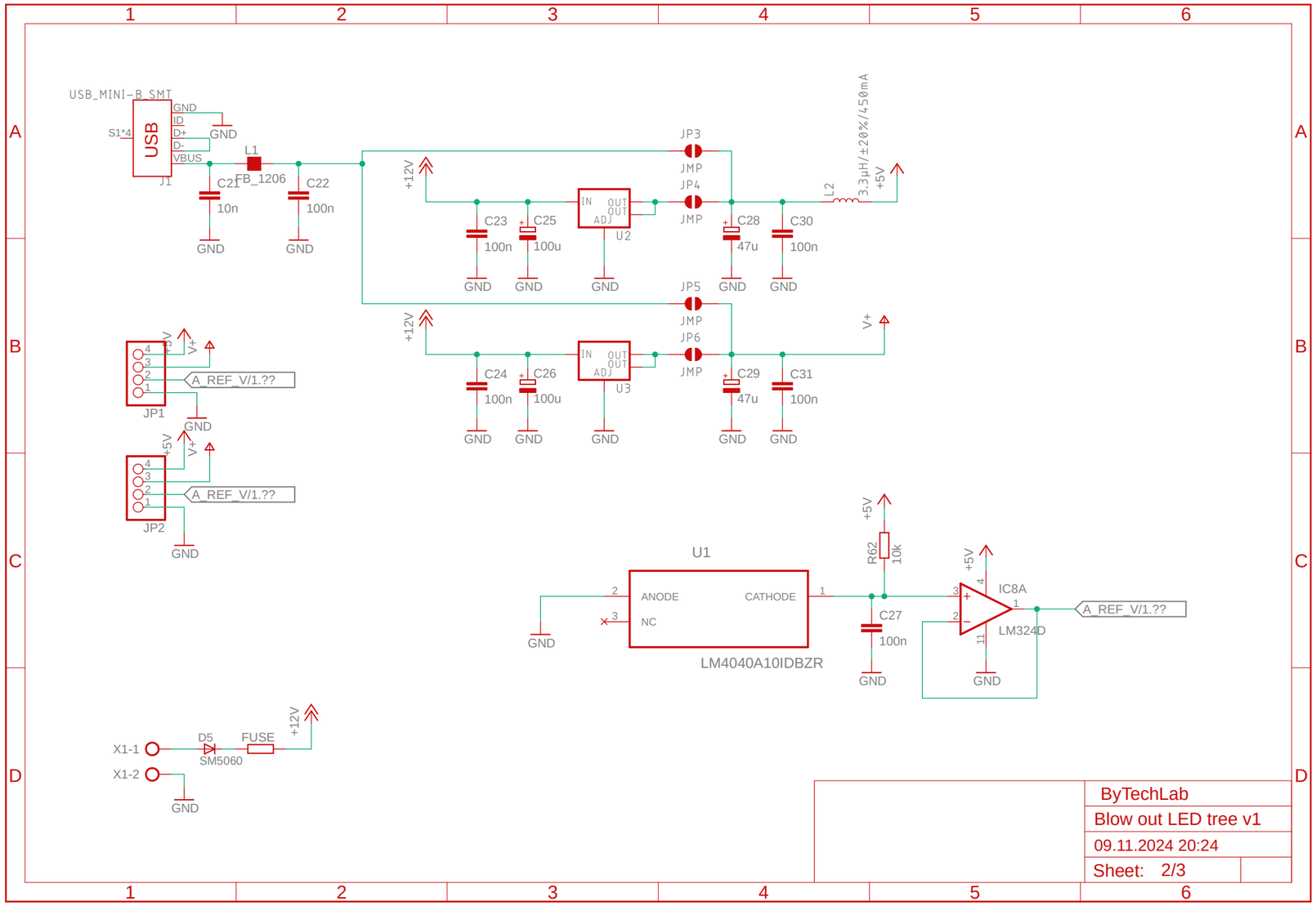
USB_MINI-B_SMT
USB
J1
S1*4
GND
ID
D+
D-
VBUS
L1
FB_1206
C21
10n
C22
100n
+12V
JP3
JMP
JP4
JMP
IN
OUT
OUT
ADJ
U2
C23
100n
C25
100u
C28
47u
C30
100n
L2
3.3µH/±20%/450mA
+5V
JP5
JMP
JP6
JMP
U3
C24
100n
C26
100u
C29
47u
C31
100n
V+
JP1
A_REF_V/1.??
JP2
U1
ANODE
CATHODE
NC
LM4040A10IDBZR
R62
10k
C27
100n
IC8A
LM324D
X1-1
X1-2
D5
SM5060
FUSE
ByTechLab
Blow out LED tree v1
09.11.2024 20:24
Sheet: 2/3

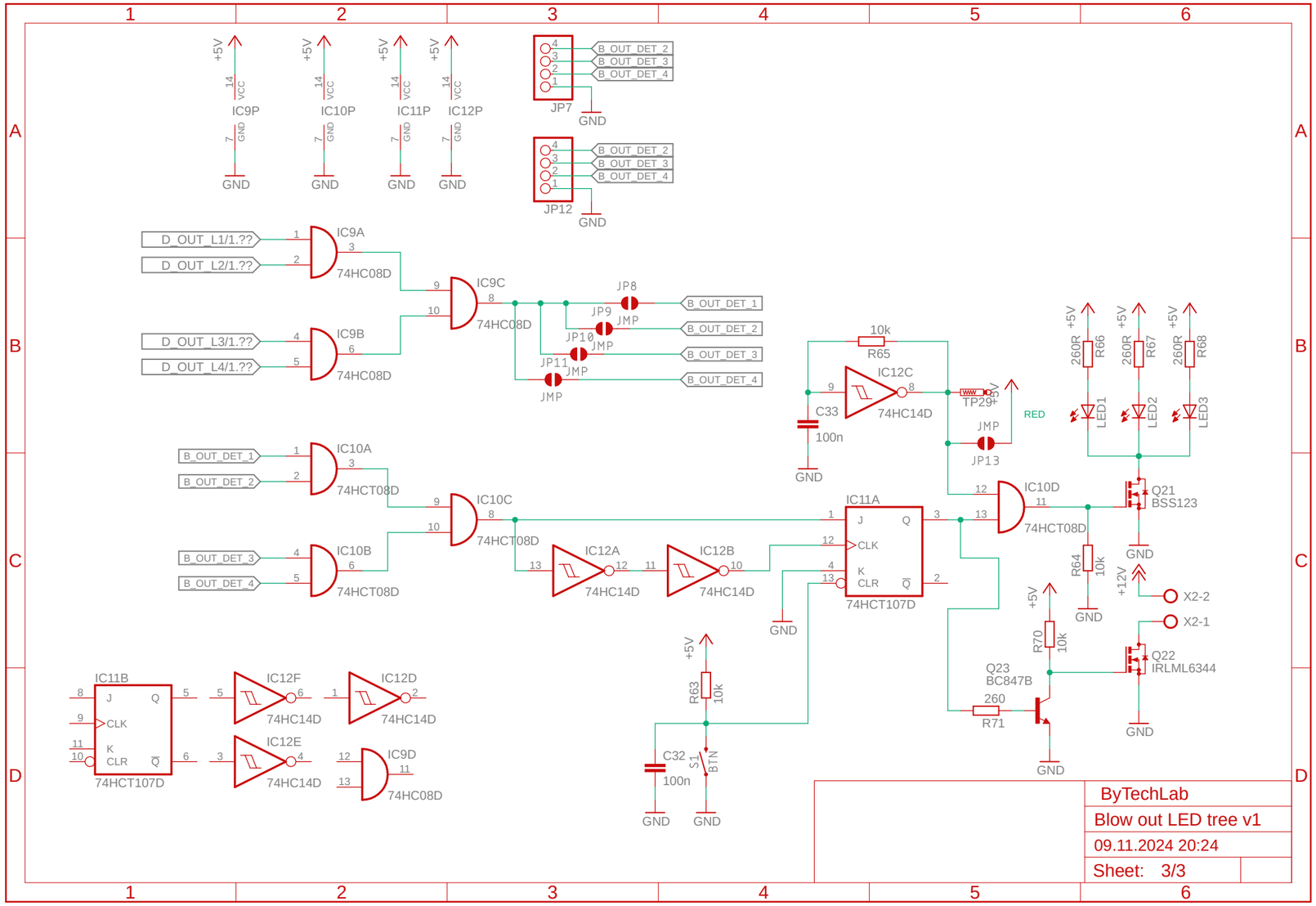
IC9P
IC10P
IC11P
IC12P
+5V
VCC
GND
JP7
JP12
B_OUT_DET_2
B_OUT_DET_3
B_OUT_DET_4
D_OUT_L1/1.??
D_OUT_L2/1.??
D_OUT_L3/1.??
D_OUT_L4/1.??
IC9A
IC9B
IC9C
IC9D
74HC08D
JP8
JP9
JP10
JP11
JMP
B_OUT_DET_1
IC10A
IC10B
IC10C
IC10D
74HCT08D
IC12A
IC12B
IC12C
IC12D
IC12E
IC12F
74HC14D
IC11A
IC11B
74HCT107D
10k
R65
C33
100n
TP29
RED
JP13
260R
R66
R67
R68
LED1
LED2
LED3
Q21
BSS123
R64
10k
+12V
X2-2
X2-1
Q22
IRLML6344
R70
10k
Q23
BC847B
260
R71
R63
10k
C32
100n
BTN
ByTechLab
Blow out LED tree v1
09.11.2024 20:24
Sheet: 3/3