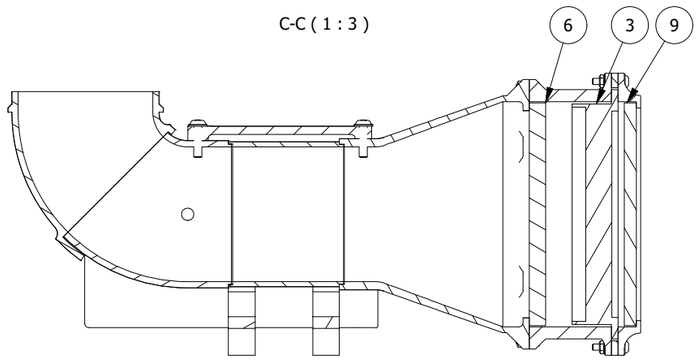

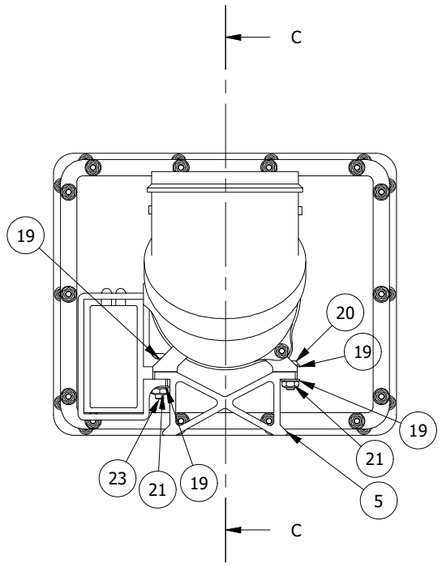

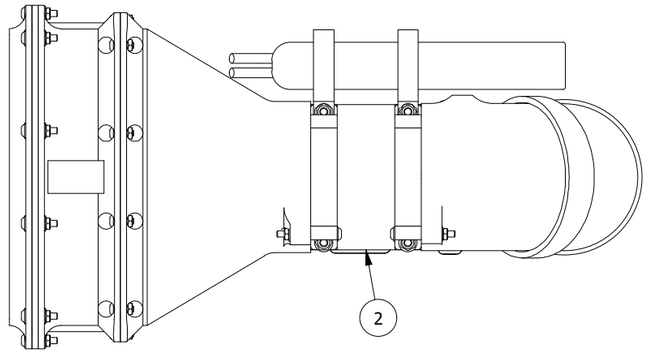

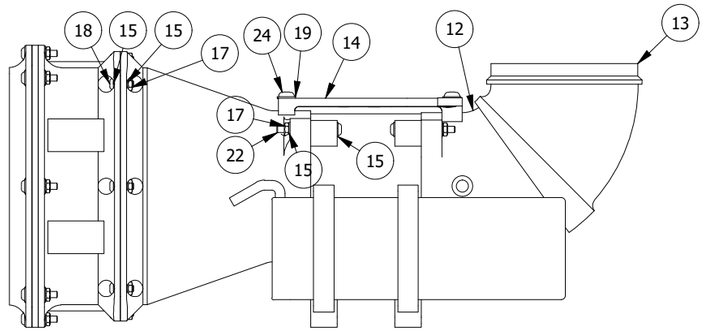

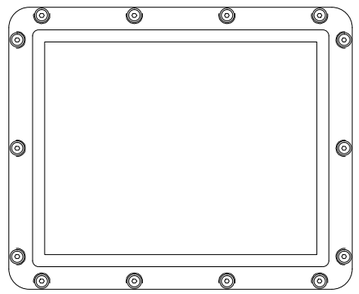

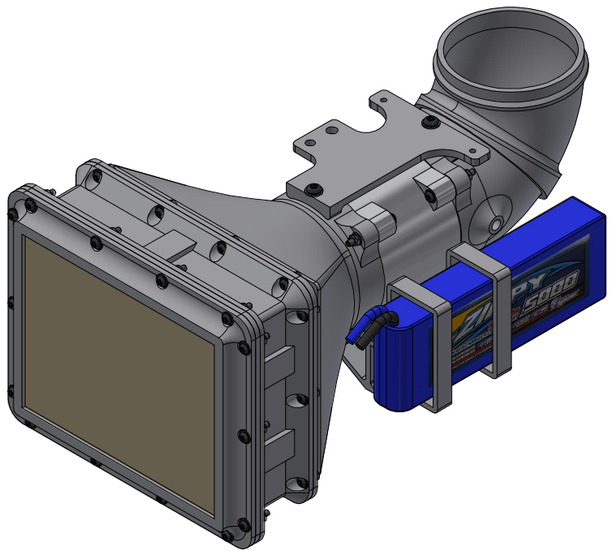

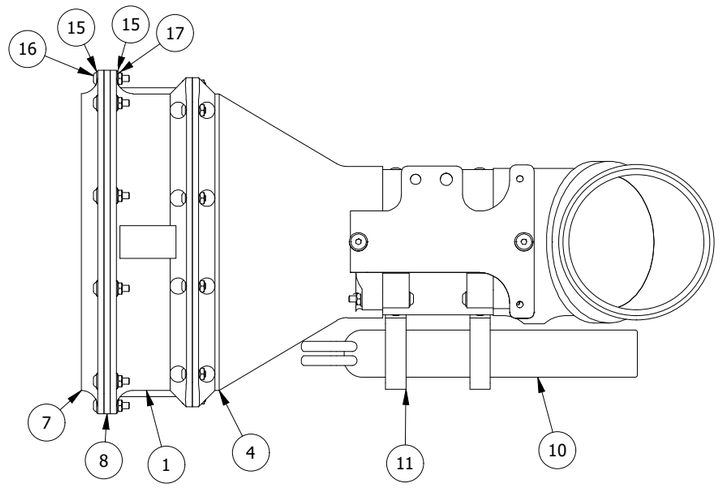

PARTS LIST		
ITEM	QTY	FILE NAME
1	1	3DP_PLA_Filter_stage.ipt
2	1	COTS_HP_BLC7000_Fan_Case.ipt
3	1	COTS_Zelmer_108x137mm_HEPA_filter.ipt
4	1	3DP_PLA_Filter_stage_to_turbine_adapter.ipt
5	2	3DP_PLA_Turbine_stand.ipt
6	1	3DP_PLA_Internal_filter_mesh.ipt
7	1	3DP_PLA_Front_filter_mount_hood.ipt
8	1	3DP_PLA_Front_filter_mount_hood_spacer.ipt
9	1	3DP_PLA_Front_filter_mesh.ipt
10	1	COTS_ZIPPY_Li-Po_Battery_5000mAh_3S.ipt
11	2	3DP_PLA_Battery_mount.ipt
12	1	3DP_PLA_Turbine_exhaust_bottom_part.ipt
13	1	3DP_PLA_Turbine_exhaust_top_part.ipt
14	1	3DP_PLA_Switch_&_handle_mount_plate.ipt
15	64	DIN 125-2 - A 3,2A.ipt
16	14	ISO 7380-1 - M3 x 16.ipt
17	32	DIN 934 - M3 x 0,5.ipt
18	14	ISO 7380-1 - M3 x 10.ipt
19	10	DIN 125-2 - A 4,3A.ipt
20	2	ISO 7380-1 - M4 x 12.ipt
21	4	DIN 934 - M4 x 0,7.ipt
22	4	ISO 7380-1 - M3 x 30.ipt
23	2	ISO 7380-1 - M4 x 20.ipt
24	2	ISO 7380-1 - M4 x 16.ipt

Designed by:	Sheet size:	Project Name:	Date:	All dimensions in [mm]
Andrzej Laczewski	A3	DIY POSITIVE PRESSURE SUIT	09.11.2024	

BYTECHLAB RESEARCH

CC BY-NC-SA 4.0

Part Name: ASSEMBLY_Main.idw

Material:	Revision	Sheet
-	1	1 / 1