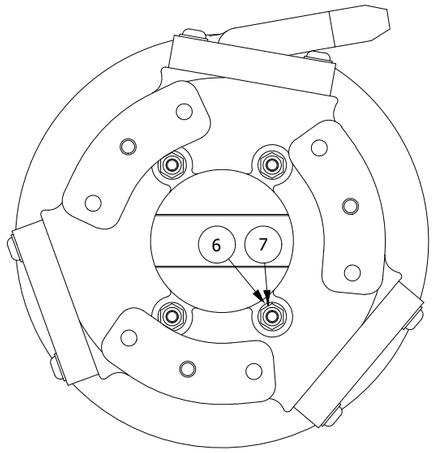

C-C (1 : 1.5)

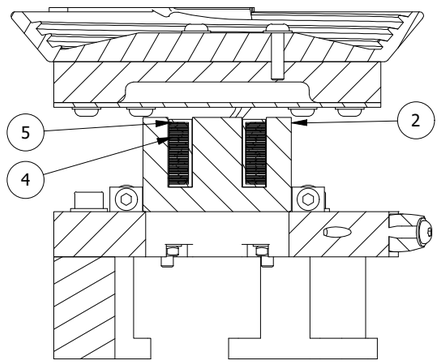

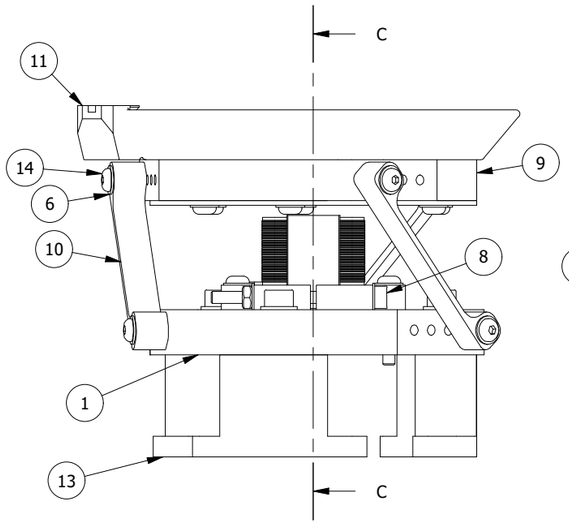

VIEW6 (1 : 1.5)

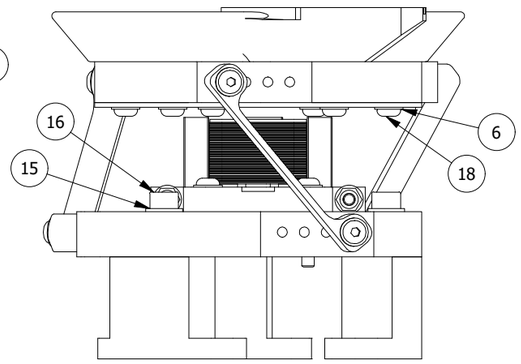

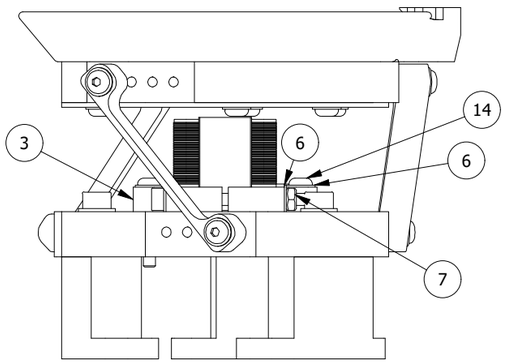

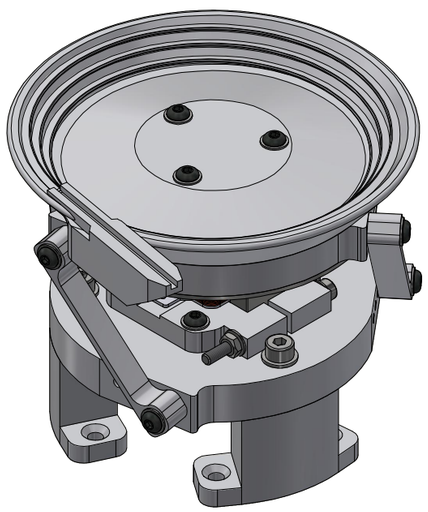

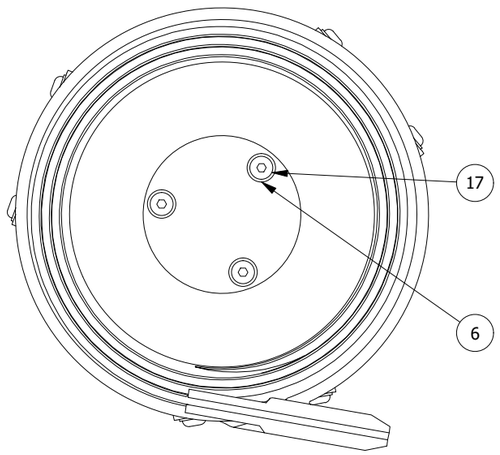

PARTS LIST		
ITEM	QTY	FILE NAME
1	1	3DP_ABS_Bowl_Feeder_Base_Plate.ipt
2	1	COTS_GENERIC_Transformer_Core.ipt
3	2	3DP_ABS_Electromagnet_Clamps.ipt
4	50	COTS_GENERIC_Transformer_Electromagnet_Coil_Layer.ipt
5	1	3DP_ABS_Electromagnet_Coil_Holder.ipt
6	27	DIN 125-2 - A 3,2A.ipt
7	6	DIN 934 - M3 x 0,5.ipt
8	2	DIN 912 - M3 x 0,5 x 40 x 18.ipt
9	1	3DP_ABS_Bowl_Springs_Mount_Plate.ipt
10	3	3DP_ABS_Bowl_Spring.ipt
11	1	3DP_ABS_Bowl_For_1206_SMD_Components.ipt
12	1	CNCM_STEEL_Bowl_Electromagnet_Plate.ipt
13	3	3DP_ABS_Bowl_Feeder_Standoff.ipt
14	10	ISO 7380-1 - M3 x 20.ipt
15	3	DIN 125-2 - A 4,3A.ipt
16	3	DIN 912 - M4 x 0,7 x 25 x 23,25.ipt
17	3	ISO 7380-1 - M3 x 12.ipt
18	6	ISO 7380-1 - M3 x 8.ipt

Designed by:	Sheet size:	Project Name:	Date:	All dimensions in [mm]
Andrzej Laczewski	A3	DIY BOWL FEEDER	16.11.2024	

BYTECHLAB RESEARCH

CC BY-NC-SA 4.0

Part Name:		
ASSEMBLY_Main.idw		
Material:	Revision	Sheet
-	1	1 / 1