C-C (1 : 1.5)

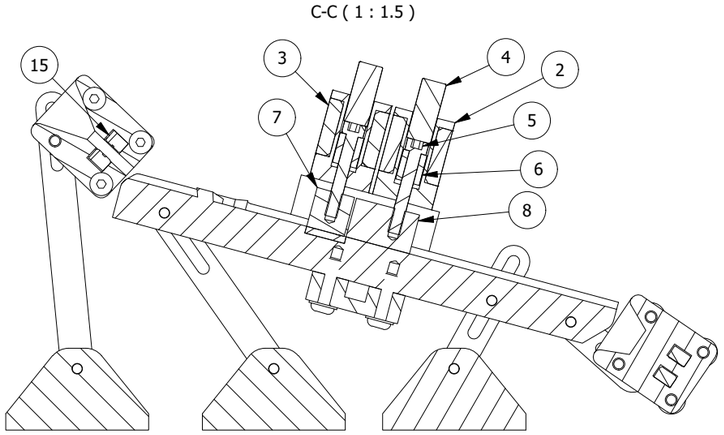

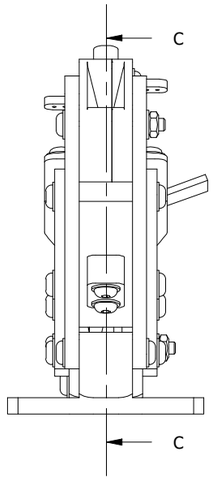

VIEW6 (1 : 1.5)

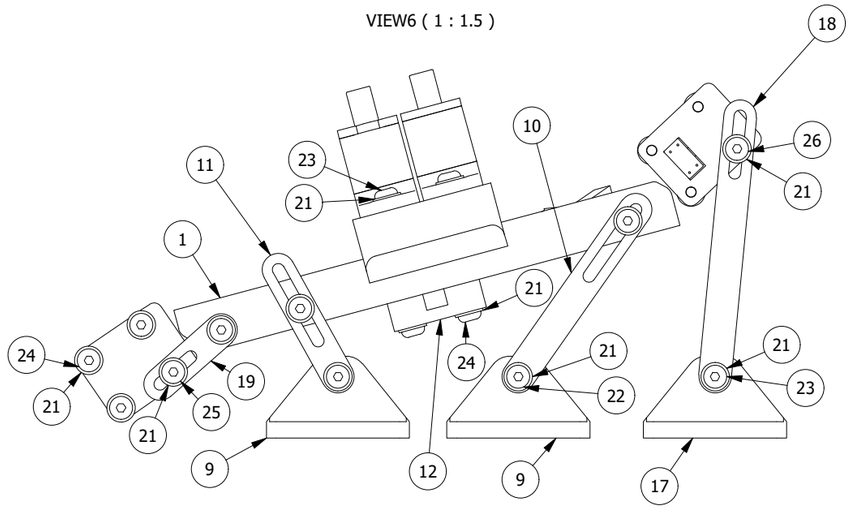

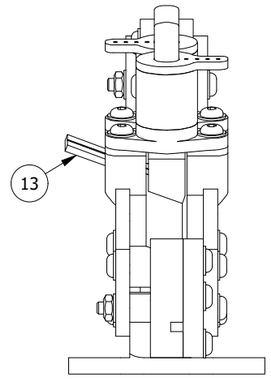

VIEW11 (1 : 1.5)

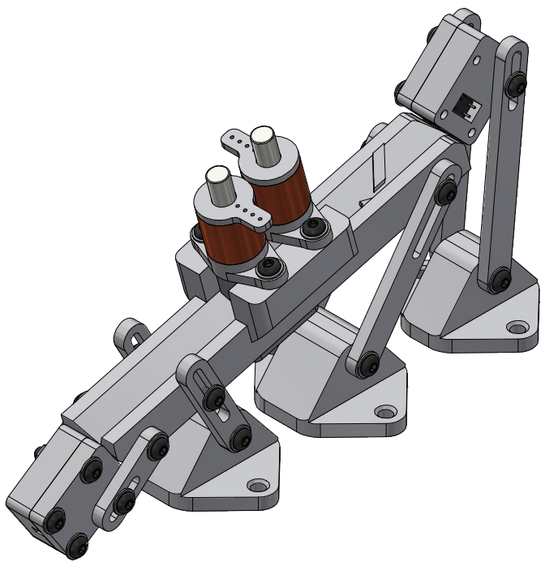

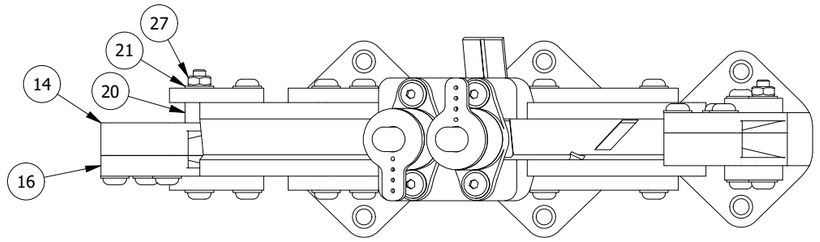

PARTS LIST		
ITEM	QTY	FILE NAME
1	1	3DP_PLA_Measurement_Rail.ipt
2	2	3DP_ABS_Solenoid_Actuator_Body.ipt
3	2	COTS_GENERIC_Solenoid_Actuator_Coil.ipt
4	2	COTS_GENERIC_6x15mm_Neodymium_Magnet.ipt
5	2	COTS_GENERIC_Solenoid_Actuator_Push_Rod_M3.ipt
6	2	3DP_ABS_Solenoid_Actuator_Offset_Spacer.ipt
7	1	3DP_PLA_Measurement_Rail_Rammer.ipt
8	1	3DP_PLA_Measurement_Rail_Barrier.ipt
9	2	3DP_PLA_Measurement_Rail_Base.ipt
10	2	3DP_PLA_Measurement_Rail_Mounting_Bracket_Long.ipt
11	2	3DP_PLA_Measurement_Rail_Mounting_Bracket_Short.ipt
12	1	3DP_PLA_Measurement_Rail_Vibration_Motor_Clamp.ipt
13	1	CNCM_FR4_Measurement_Rail_Contacts.ipt
14	2	3DP_PLA_Part_Detector_Bottom_Half.ipt
15	2	COTS_Vishay_TCST1230_Optocoupler.ipt
16	2	3DP_PLA_Part_Detector_Top_Half.ipt
17	1	3DP_PLA_Part_Detector_Base.ipt
18	2	3DP_PLA_Part_Detector_Mounting_Bracket.ipt
19	2	3DP_PLA_Part_Detector_Mounting_Bracket_Short.ipt
20	1	3DP_PLA_Part_Detector_Mounting_Bracket_Short_Washer.ipt
21	28	DIN 125-2 - A 3,2A.ipt
22	10	ISO 7380-1 - M3 x 10.ipt
23	6	ISO 7380-1 - M3 x 8.ipt
24	8	ISO 7380-1 - M3 x 12.ipt
25	1	ISO 7380-1 - M3 x 30.ipt
26	1	ISO 7380-1 - M3 x 25.ipt
27	2	DIN 934 - M3 x 0,5.ipt

Designed by:	Sheet size:	Project Name:	Date:	All dimensions in [mm]
Andrzej Laczewski	A3	MEASUREMENT RAIL FOR SMD PARTS	27.07.2025	

BYTECHLAB RESEARCH
www.bytechlab.com

CC BY-SA 4.0

Part Name:
ASSEMBLY_Main.idw

Material:	Revision	Sheet
-	1	1 / 1