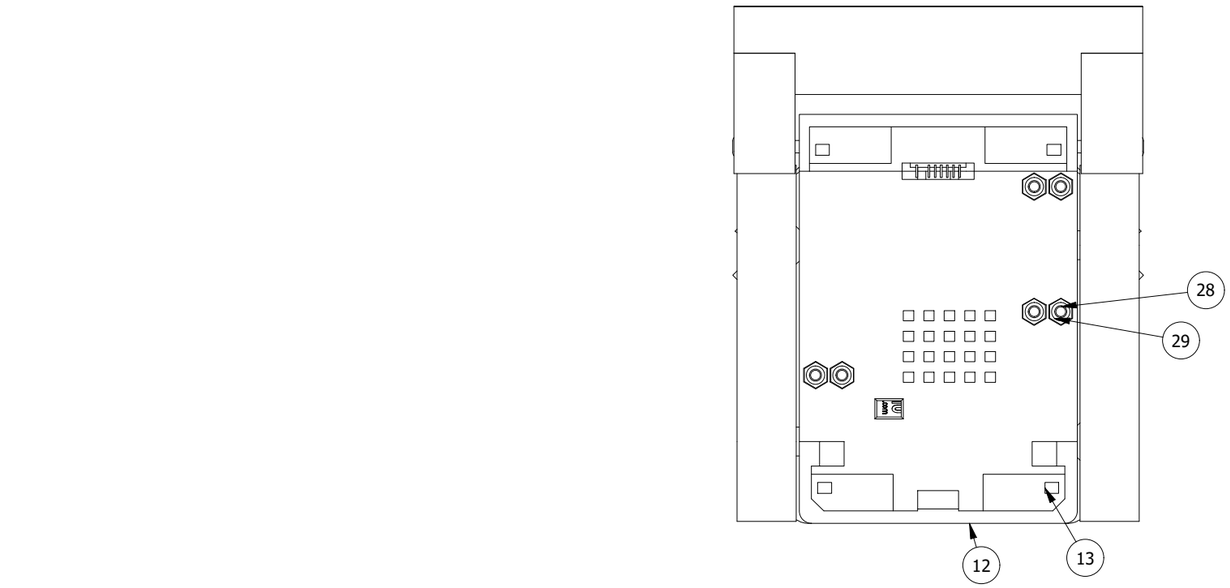

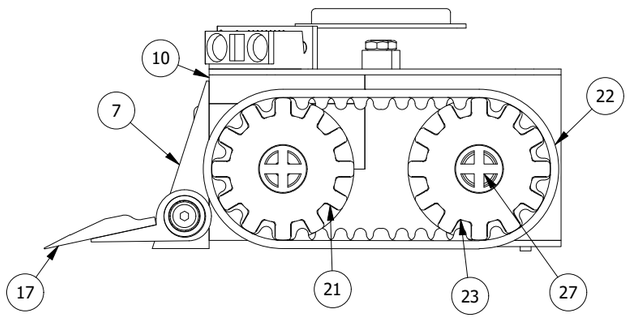

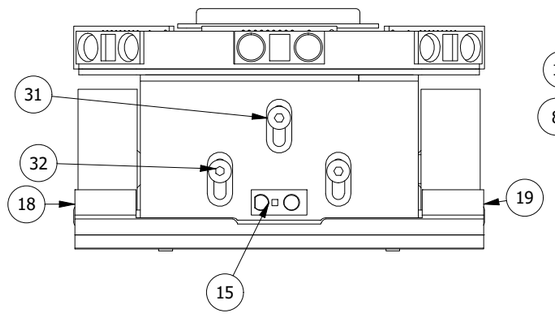

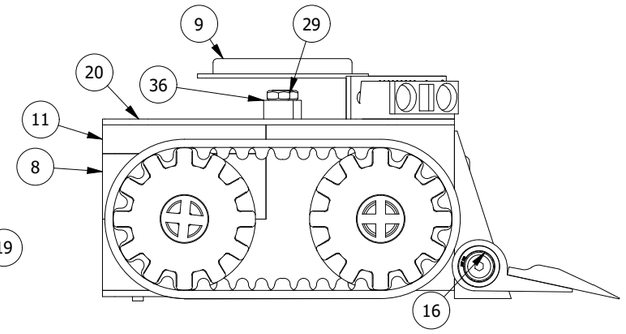

D-D (1 : 1.5)

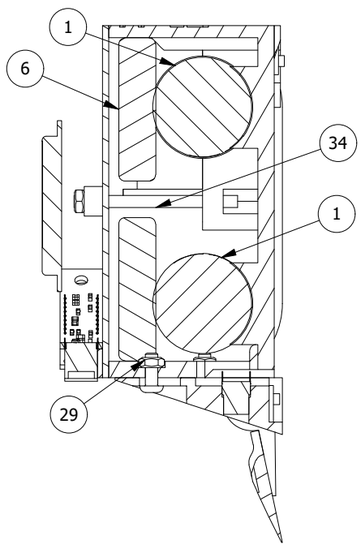

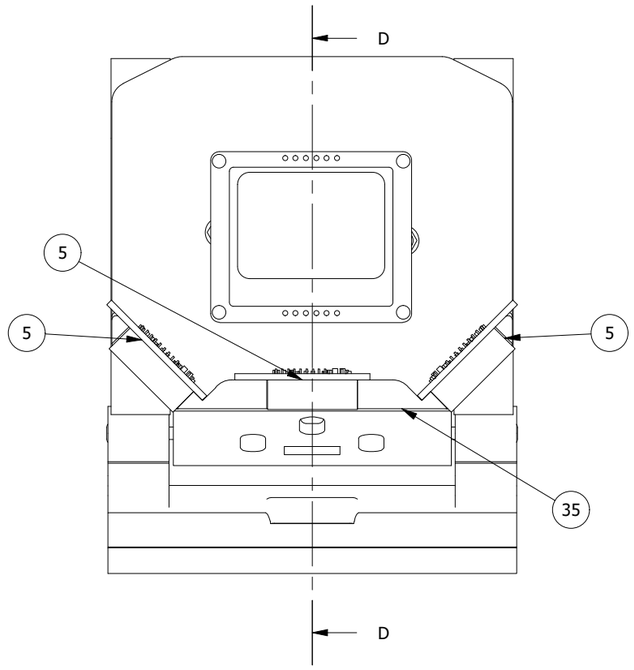

PARTS LIST		
ITEM	QTY	FILE NAME
1	2	COTS_POLOLU_24Dx48L_HP.ipt
2	1	3DP_PLA_Main_frame.ipt
3	4	COTS_AST_604HZZ_Bearing.ipt
4	1	3DP_PLA_Motor_mounting_bracket_front.ipt
5	3	COTS_SHARP_GP2Y0D810Z0F_sensor.ipt
6	2	COTS_GENERIC_LiPo_Baterry.ipt
7	1	3DP_PLA_Front_plow.ipt
8	1	3DP_PLA_Motor_mounting_bracket_back.ipt
9	1	COTS_Nokia_5110_LCD_display.ipt
10	1	3DP_PLA_Front_motor_clamp_hole_plug.ipt
11	1	3DP_PLA_Back_motor_clamp_hole_plug.ipt
12	1	3DP_PLA_Back_slider.ipt
13	2	ASSEMBLY_PCB_Line_sensor.ipt
14	2	ASSEMBLY_PCB_Line_sensor_mir.ipt
15	1	COTS_SHARP_GP2Y0D810Z0F_sensor_no_pcb.ipt
16	4	COTS_SKF_623_RS_285-0790_Bearing.ipt
17	1	3DP_PLA_Front_blade.ipt
18	1	3DP_PLA_Front_blade_hinge.ipt
19	1	3DP_PLA_Front_blade_hinge_mir.ipt
20	1	ASSEMBLY_PCB_Motherboard.ipt
21	2	3DP_PLA_Motor_wheel.ipt
22	2	COTS_POLOLU_22T_Track.ipt
23	2	3DP_PLA_Screw_wheel.ipt
24	2	ISO 7380-1 - M4 x 25.ipt
25	2	DIN 125-2 - A 4,3A.ipt
26	2	DIN 934 - M4 x 0,7.ipt
27	4	3DP_PLA_Wheel_cover.ipt
28	8	ISO 7380-1 - M3 x 30.ipt
29	13	DIN 934 - M3 x 0,5.ipt
30	34	DIN 125-2 - A 3,2A.ipt
31	1	ISO 7380-1 - M3 x 8.ipt
32	2	ISO 7380-1 - M3 x 10.ipt
33	2	ISO 7380-1 - M3 x 25.ipt
34	2	CUT_M3_Threaded_rod.ipt
35	1	3DP_PLA_Front_Sharp_sensors_mounting_bracket.ipt
36	2	3DP_PLA_M3_screw_washer.ipt

Designed by:	Sheet size:	Project Name:	Date:	All dimensions in [mm]
Andrzej Laczewski	A3	MINISUMO BULLET XT	24.11.2024	

BYTECHLAB RESEARCH

CC BY-NC-SA 4.0

Part Name: ASSEMBLY_Main.idw

Material:	Revision	Sheet
-	1	1 / 1