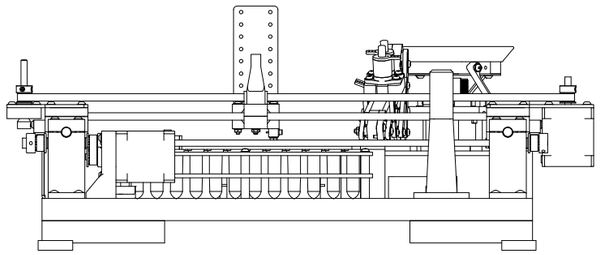

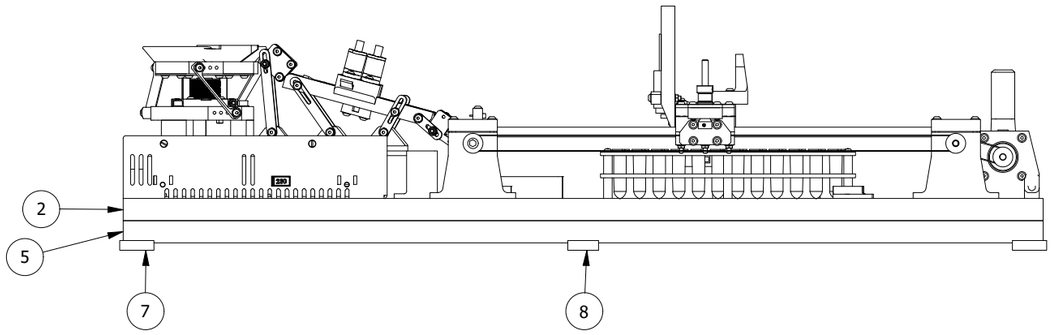

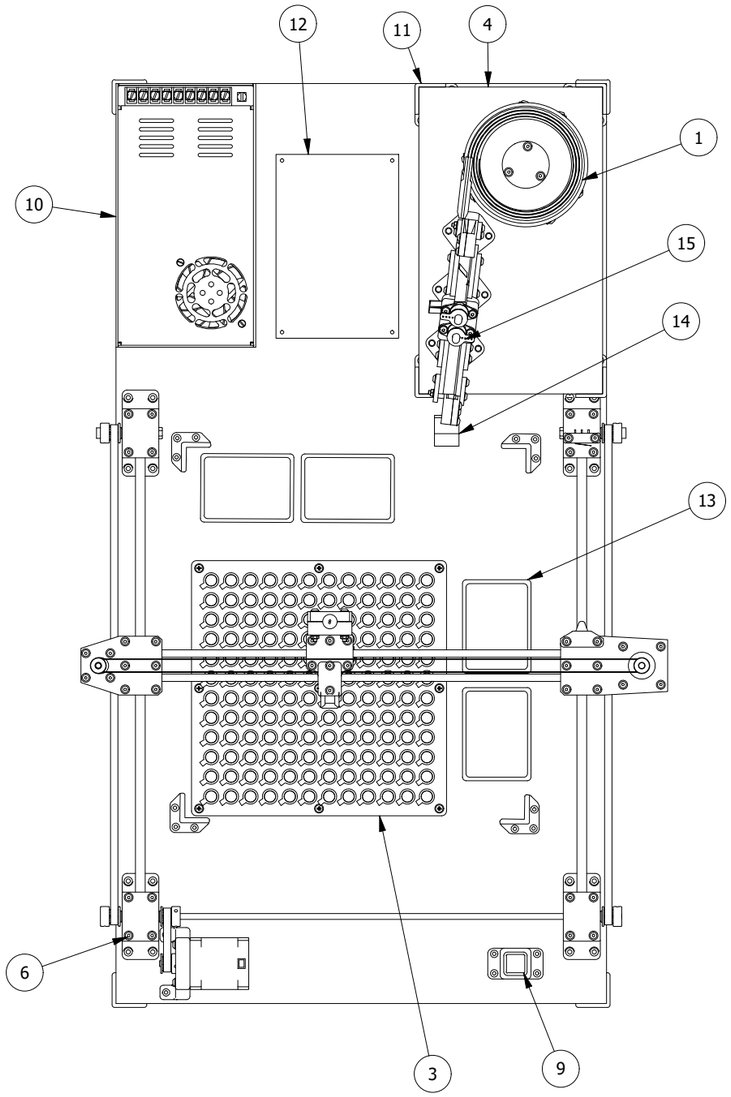

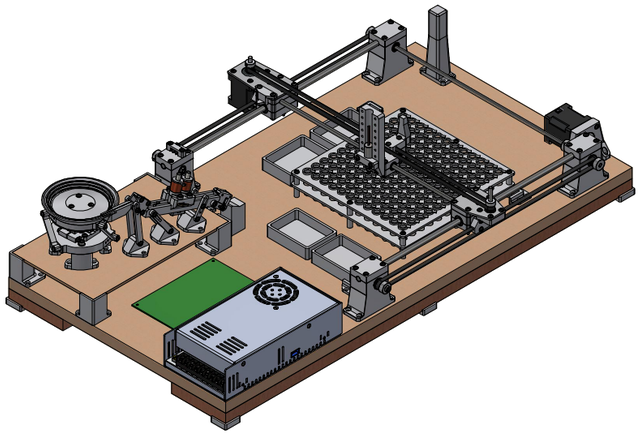

PARTS LIST		
ITEM	QTY	FILE NAME
1	1	ASSEMBLY_Main_Bowl_Feeder.iam
2	1	CNCM_WOOD_18mm_Base_plate.ipt
3	1	ASSEMBLY_Main_Test_tube_array.iam
4	1	CNCM_WOOD_4mm_Sorting_line_base_plate.ipt
5	2	CNCM_WOOD_18mm_Base_plate_reinforcement.ipt
6	1	ASSEMBLY_Main_XY_Axis.iam
7	4	3DP_PLA_Base_plate_corner_leg.ipt
8	2	3DP_PLA_Base_plate_side_leg.ipt
9	1	3DP_PLA_Base_plate_wire_harness_mount.ipt
10	1	COTS_GENERIC_12V_PSU.iam
11	4	3DP_PLA_Sorting_line_base_plate_standoff.ipt
12	1	ASSEMBLY_Controller_PCB.ipt
13	4	3DP_PLA_Tray_for_unknown_parts.ipt
14	1	3DP_PLA_Pick_up_tray.ipt
15	1	ASSEMBLY_Main_Measurement_Rail.iam

Designed by: Andrzej Laczewski	Sheet size: A3	Project Name: SMD PARTS SORTING MACHINE	Date: 01.12.2024	All dimensions in [mm]
BYTECHLAB RESEARCH	CC BY-NC-SA 4.0	Part Name: ASSEMBLY_Main.idw		
		Material: -	Revision 1	Sheet 1 / 1