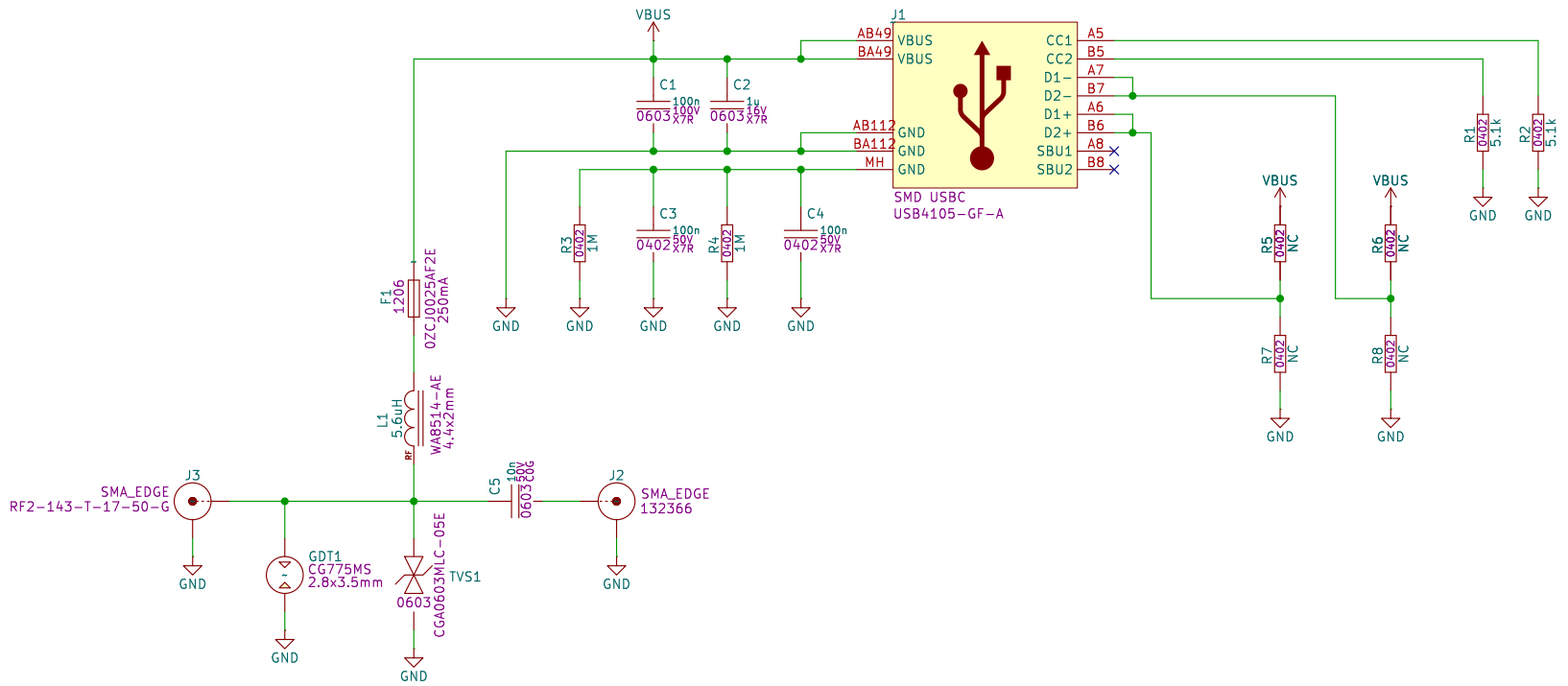

CC1/CC2 −> 5.1k:
Nominal 1.5A of power and up to 3A depending on the upstream device.

REV1 BUGS / THINGS TO IMPROVE:

Project Name: Mostly 3D Printed Discone Antenna		
Sheet Name: Root		
Sheet Path: /		
File Name: BIAS_TEE_PCB.kicad_sch		
Size: A4	Date: 2025−08−10	**Rev: 1**
Designed By: Andrzej Laczewski	Website: www.bytechlab.com	Id: #/1

BYTECHLAB RESEARCH

CC BY−SA 4.0