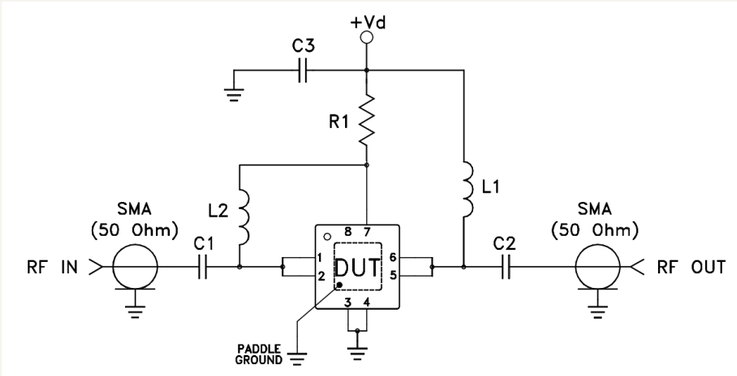

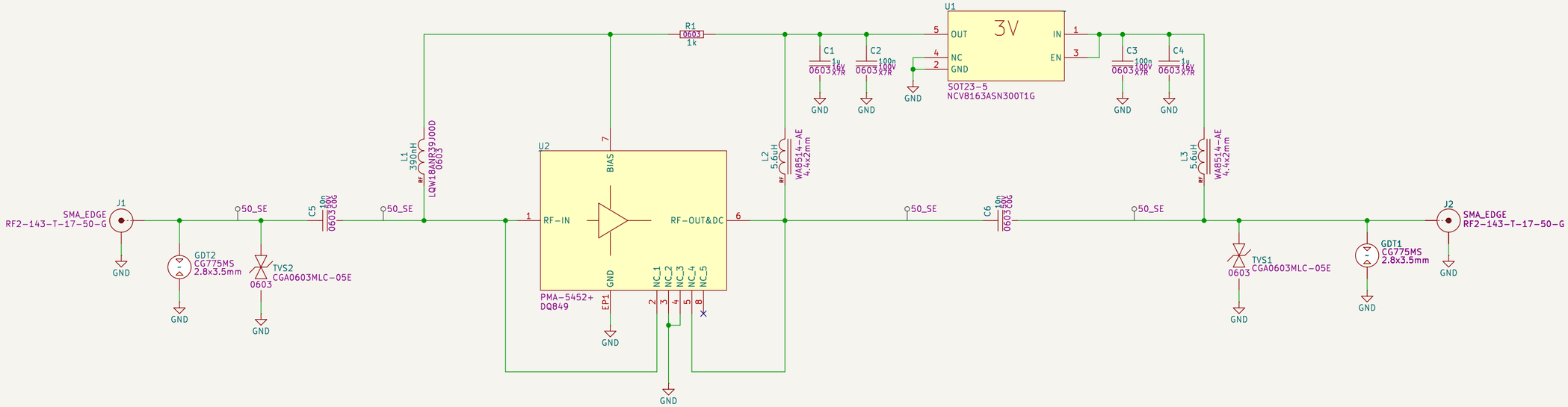

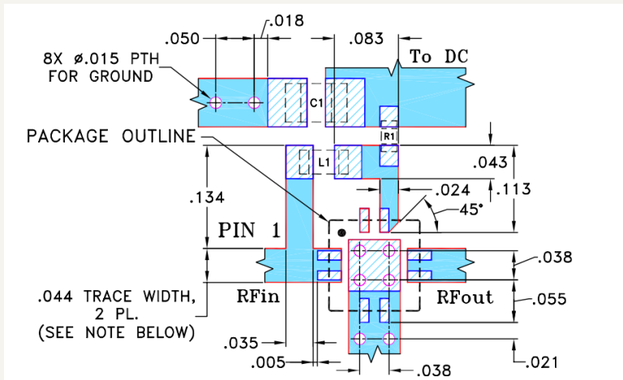

RESISTOR R1: 0402 SIZE
INDUCTOR L1: 0603 SIZE
CAPACITOR C1: 0805 SIZE

NOTES:

REV1 BUGS / THINGS TO IMPROVE:

Project Name: Mostly 3D Printed Discone Antenna		BYTECHLAB RESEARCH
Sheet Name: Root		
Sheet Path: /		
File Name: PREAMP_PCB.kicad_sch		CC BY-NC-SA 4.0
Size: A3	Date: 2025-08-10	**Rev: 1**
Designed By: Andrzej Laczewski	Website: www.bytechlab.com	Id: #/1