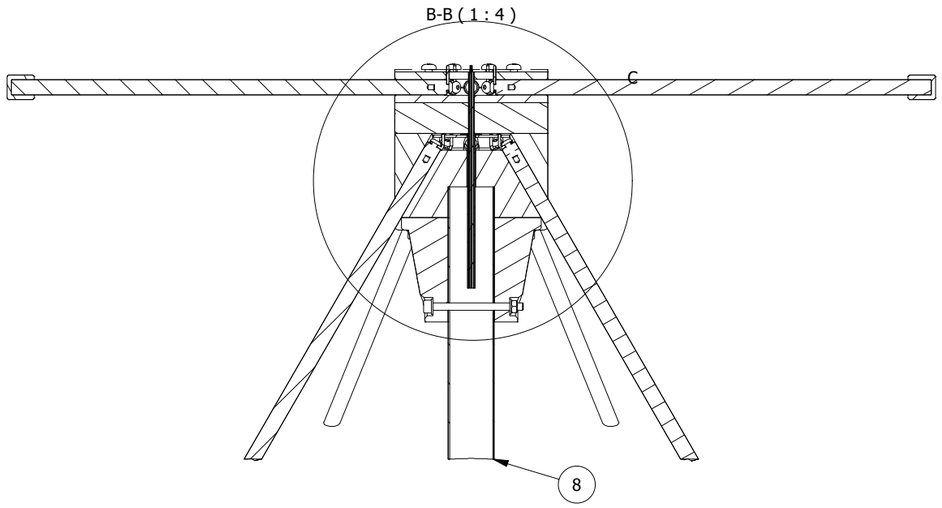

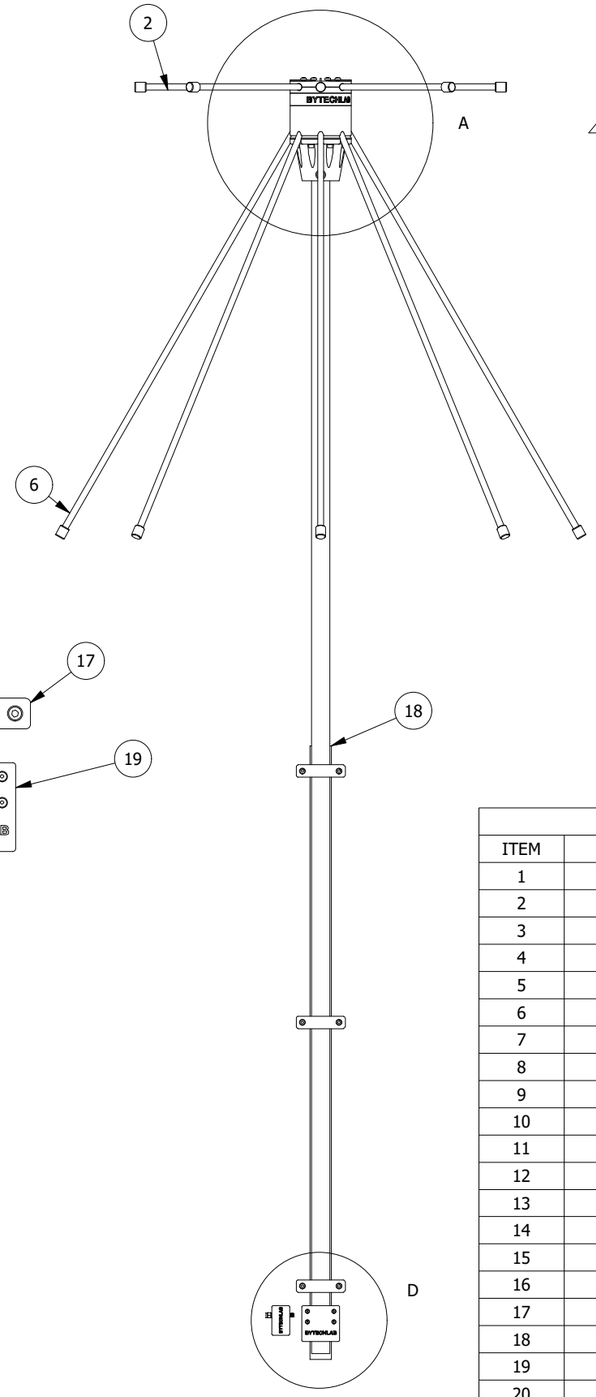

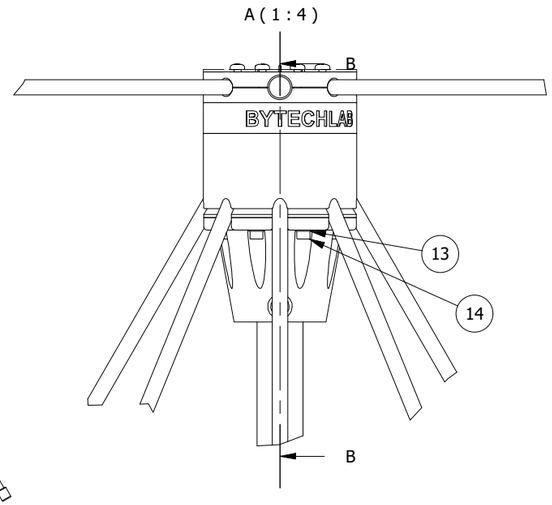

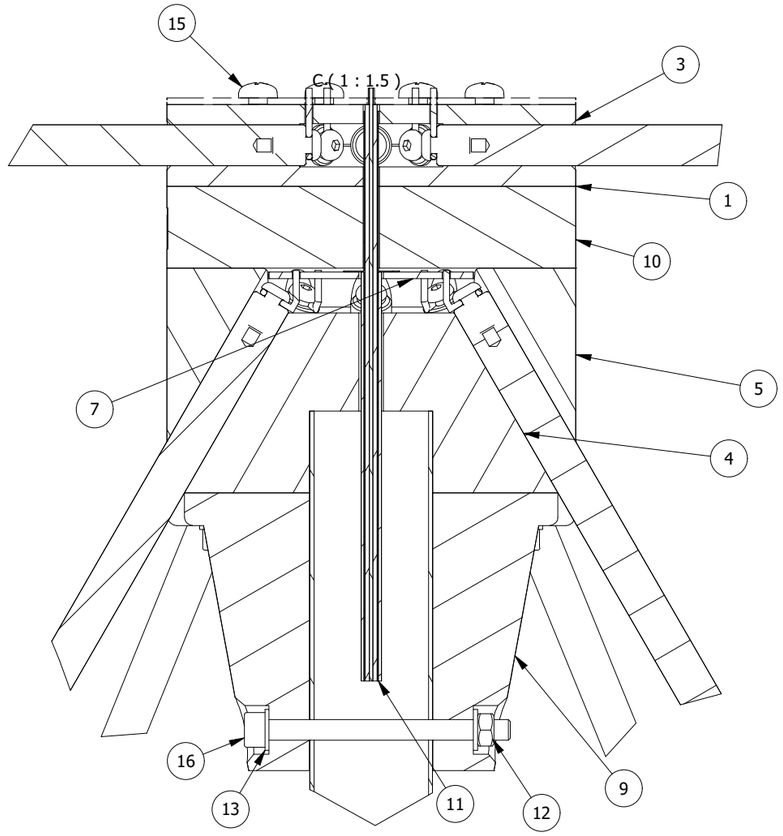

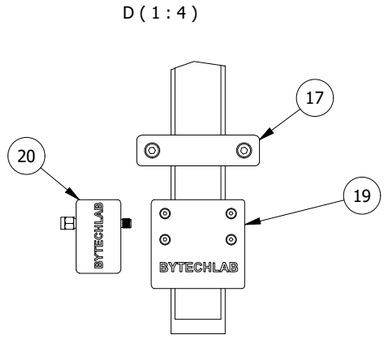

PARTS LIST		
ITEM	QTY	FILE NAME
1	1	3DP_ASA_Top_Disc_Bottom_Half.ipt
2	8	ASSEMBLY_Top_Disc_Rod.iam
3	1	3DP_ASA_Top_Disc_Top_Half.ipt
4	1	3DP_ASA_Bottom_Cone_Bottom_Half.ipt
5	1	3DP_ASA_Bottom_Cone_Top_Half.ipt
6	8	ASSEMBLY_Bottom_Cone_Rod.iam
7	1	CUT_FR4_Bottom_Cone_PCB.ipt
8	1	COTS_CarbonCenter_Fiberglass_30x28x2000mm_Pipe.ipt
9	1	3DP_ASA_Mast_Mount.ipt
10	1	3DP_ASA_Cone_and_Disc_Mount.ipt
11	1	COTS_Pasternack_RG58CU_Coax_Cable.iam
12	9	DIN 934 - M5 x 0,8.ipt
13	10	DIN 125 - A 5,3.ipt
14	8	COTS_GENERIC_DIN 912 - M5x80.ipt
15	8	COTS_Dremec_8G206M5X40_M5x40_Nylon_Screw.ipt
16	1	COTS_GENERIC_DIN 912 - M5x60.ipt
17	3	ASSEMBLY_Balcony_Mounting_Clamp.iam
18	1	COTS_GENERIC_Balcony_Railing.ipt
19	1	ASSEMBLY_Preamp.iam
20	1	ASSEMBLY_Bias_Tee.iam
21	8	COTS_BOSSARD_B5_BN81_M5_Nylon_Nuts.ipt

Designed by:	Sheet size:	Project Name:	Date:	All dimensions in [mm]
Andrzej Laczewski	A3	MOSTLY 3D PRINTED DISCONE ANTENNA	27.07.2025	

BYTECHLAB RESEARCH

CC BY-NC-SA 4.0

Part Name:		
ASSEMBLY_Main.idw		
Material:	Revision	Sheet
-	V4,1	1 / 1