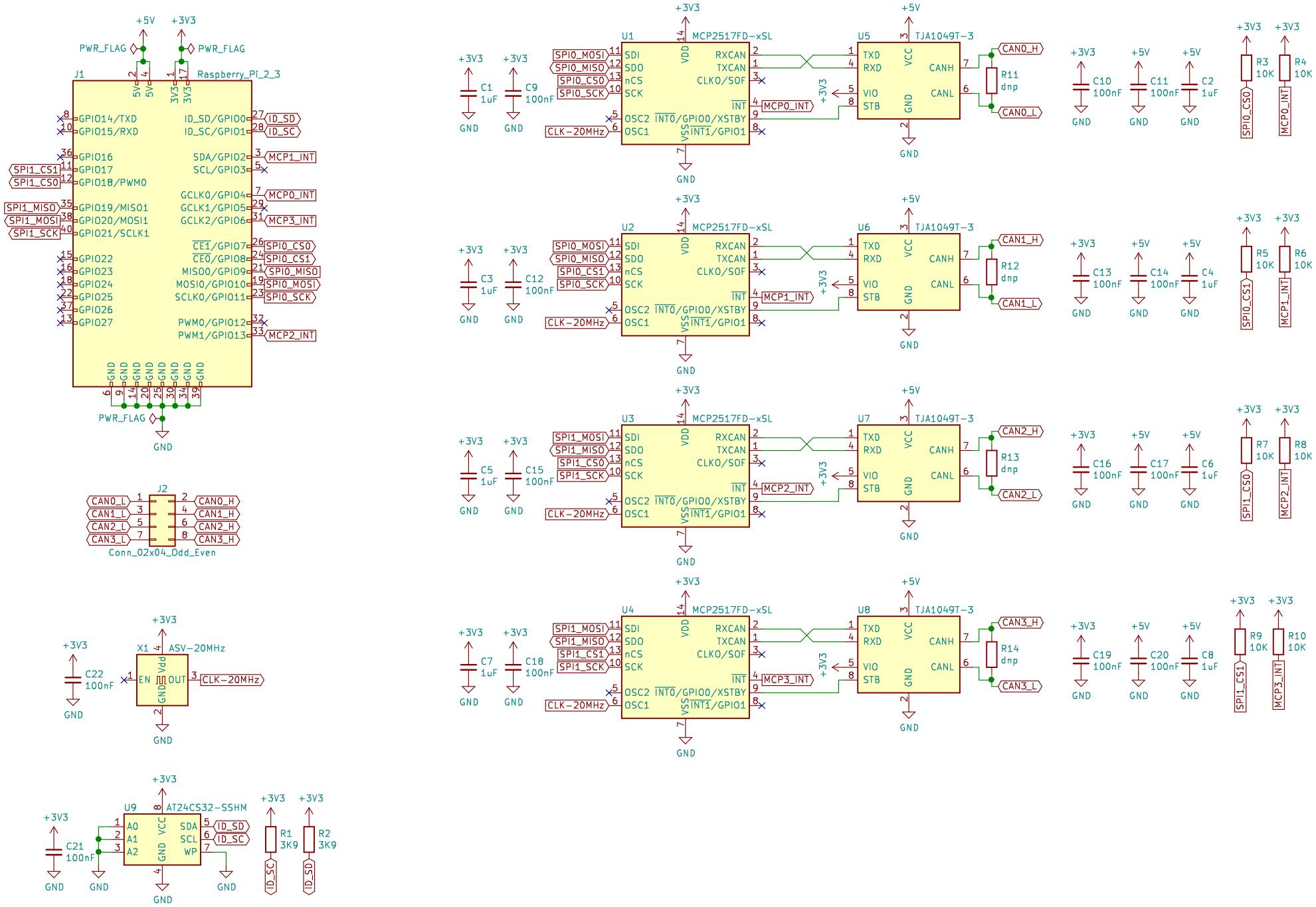
J1
Raspberry_Pi_2_3
GPIO14/TXD
GPIO15/RXD
GPIO16
GPIO17
GPIO18/PWM0
GPIO19/MISO1
GPIO20/MOSI1
GPIO21/SCLK1
GPIO22
GPIO23
GPIO24
GPIO25
GPIO26
GPIO27
ID_SD/GPIO0
ID_SC/GPIO1
SDA/GPIO2
SCL/GPIO3
GCLK0/GPIO4
GCLK1/GPIO5
GCLK2/GPIO6
CE1/GPIO7
CE0/GPIO8
MISO0/GPIO9
MOSI0/GPIO10
SCLK0/GPIO11
PWM0/GPIO12
PWM1/GPIO13
PWR_FLAG
+5V
+3V3
GND
J2
Conn_02x04_Odd_Even
X1
ASV-20MHz
C22
100nF
CLK-20MHz
U9
AT24CS32-SSHM
C21
100nF
R1
3K9
R2
3K9
U1
MCP2517FD-xSL
U2
U3
U4
U5
TJA1049T-3
U6
U7
U8
C1
1uF
C9
100nF
C3
1uF
C12
100nF
C5
1uF
C15
100nF
C7
1uF
C18
100nF
R11
dnp
R12
dnp
R13
dnp
R14
dnp
C10
100nF
C11
100nF
C2
1uF
C13
100nF
C14
100nF
C4
1uF
C16
100nF
C17
100nF
C6
1uF
C19
100nF
C20
100nF
C8
1uF
R3
10K
R4
10K
R5
10K
R6
10K
R7
10K
R8
10K
R9
10K
R10
10K
CAN0_H
CAN0_L
CAN1_H
CAN1_L
CAN2_H
CAN2_L
CAN3_H
CAN3_L
MCP0_INT
MCP1_INT
MCP2_INT
MCP3_INT
SPI0_MOSI
SPI0_MISO
SPI0_CS0
SPI0_CS1
SPI0_SCK
SPI1_MOSI
SPI1_MISO
SPI1_CS0
SPI1_CS1
SPI1_SCK
ID_SD
ID_SC