ITEM NO.	PART NUMBER	DESCRIPTION	QTY.
1	DRFT21-TERM4	SHUTTER HOUSING	1
2	DRFT21-TERM14	LENS MOUNT	1
3	DRFT21-TERM18	SHUTTER ARM	1
4	DRFT21-TERM16	SHUTTER SPACER	1
5	DRFT21-TERM6	SHUTTER	1
6	DRFT21-TERM25	SHUTTER BUTTON	1
7	DRFT21-TERM23	CONTROL LEVER	1
8	DRFT21-TERM22	RIVET C	1
9	DRFT21-TERM20	RIVET A	1
10	DRFT21-TERM24	SPRING	1
11	DRFT21-TERM17	FILTER SPACER	1
12	DRFT21-TERM11	FILTER A & B	2
13	DRFT21-TERM21	RIVET B	1

REVISIONS				
ZONE	REV.	DESCRIPTION	DATE	APPROVED

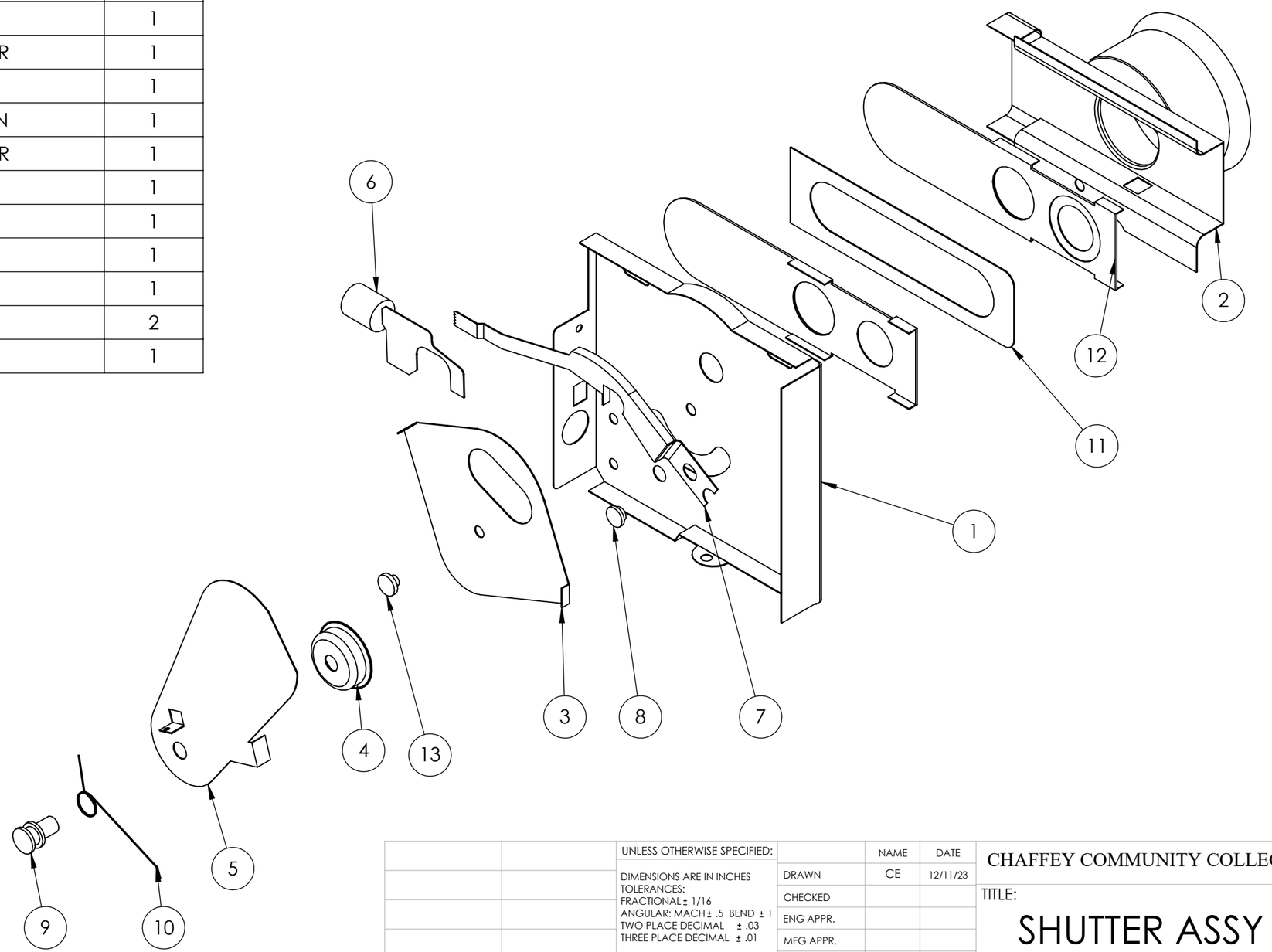

PROPRIETARY AND CONFIDENTIAL

THE INFORMATION CONTAINED IN THIS DRAWING IS THE SOLE PROPERTY OF CHAFFEY COMMUNITY COLLEGE. ANY REPRODUCTION IN PART OR AS A WHOLE WITHOUT THE WRITTEN PERMISSION OF CHAFFEY COMMUNITY COLLEGE IS PROHIBITED.

NEXT ASSY	USED ON
APPLICATION	

UNLESS OTHERWISE SPECIFIED:

DIMENSIONS ARE IN INCHES
TOLERANCES:
FRACTIONAL ± 1/16
ANGULAR: MACH ± .5 BEND ± 1
TWO PLACE DECIMAL ± .03
THREE PLACE DECIMAL ± .01

INTERPRET GEOMETRIC TOLERANCING PER: Y14.5

MATERIAL

FINISH

DO NOT SCALE DRAWING

	NAME	DATE
DRAWN	CE	12/11/23
CHECKED		
ENG APPR.		
MFG APPR.		
Q.A.		

COMMENTS:

CHAFFEY COMMUNITY COLLEGE

TITLE:

SHUTTER ASSY

SIZE	DWG. NO.	REV
B	DRFT21-TERMASSY2	

SCALE: 1:2 WEIGHT: SHEET 1 OF 1