REVISIONS				
ZONE	REV.	DESCRIPTION	DATE	APPROVED

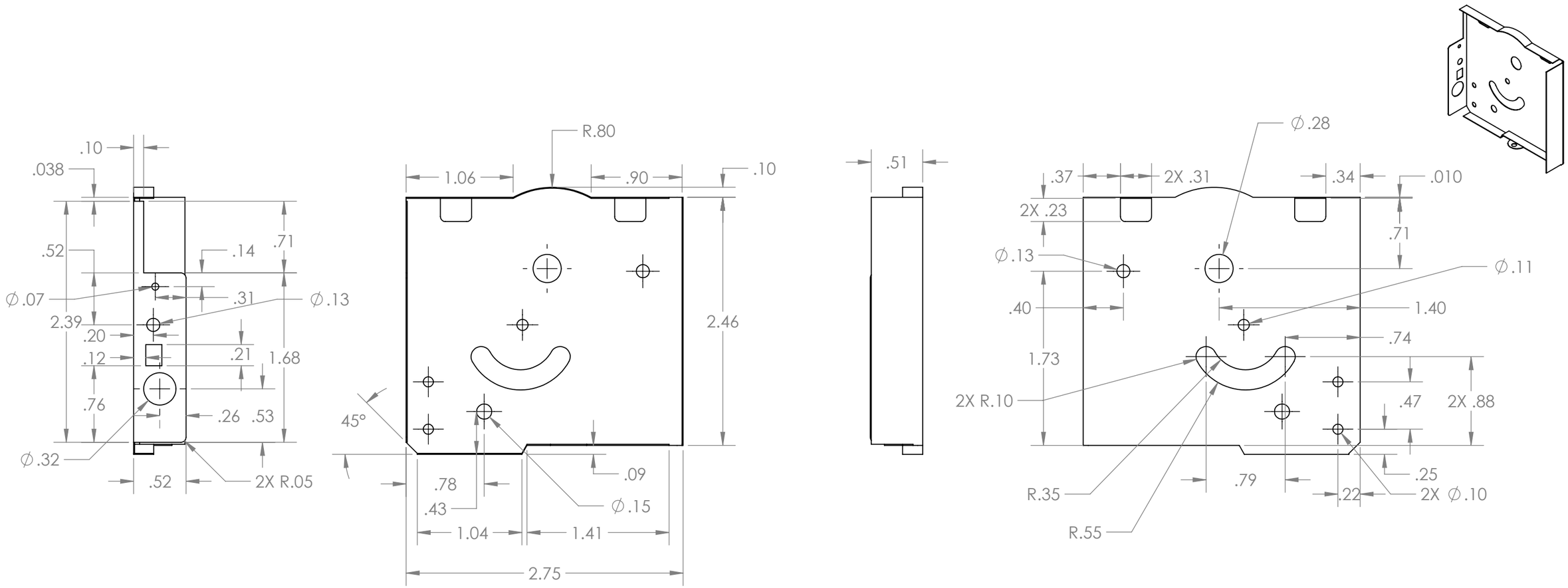

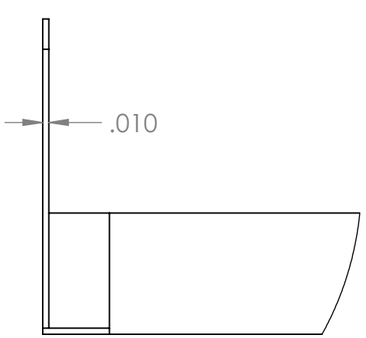

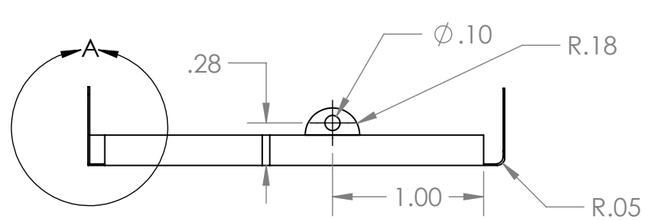

DETAIL A
SCALE 4 : 1

PROPRIETARY AND CONFIDENTIAL

THE INFORMATION CONTAINED IN THIS DRAWING IS THE SOLE PROPERTY OF CHAFFEY COMMUNITY COLLEGE. ANY REPRODUCTION IN PART OR AS A WHOLE WITHOUT THE WRITTEN PERMISSION OF CHAFFEY COMMUNITY COLLEGE IS PROHIBITED.

NEXT ASSY	USED ON
APPLICATION	

UNLESS OTHERWISE SPECIFIED:

DIMENSIONS ARE IN INCHES
TOLERANCES:
FRACTIONAL ± 1/16
ANGULAR: MACH ± .5 BEND ± 1
TWO PLACE DECIMAL ± .03
THREE PLACE DECIMAL ± .01

INTERPRET GEOMETRIC TOLERANCING PER: Y14.5

MATERIAL
NICKEL

FINISH

DO NOT SCALE DRAWING

	NAME	DATE
DRAWN	CE	12/07/23
CHECKED		
ENG APPR.		
MFG APPR.		
Q.A.		

COMMENTS:

CHAFFEY COMMUNITY COLLEGE

TITLE:

SHUTTER HOUSING

SIZE	DWG. NO.	REV
B	DRFT21-TERM4	

SCALE: 1:1 | WT: 0.029023 | SHEET 1 OF 1