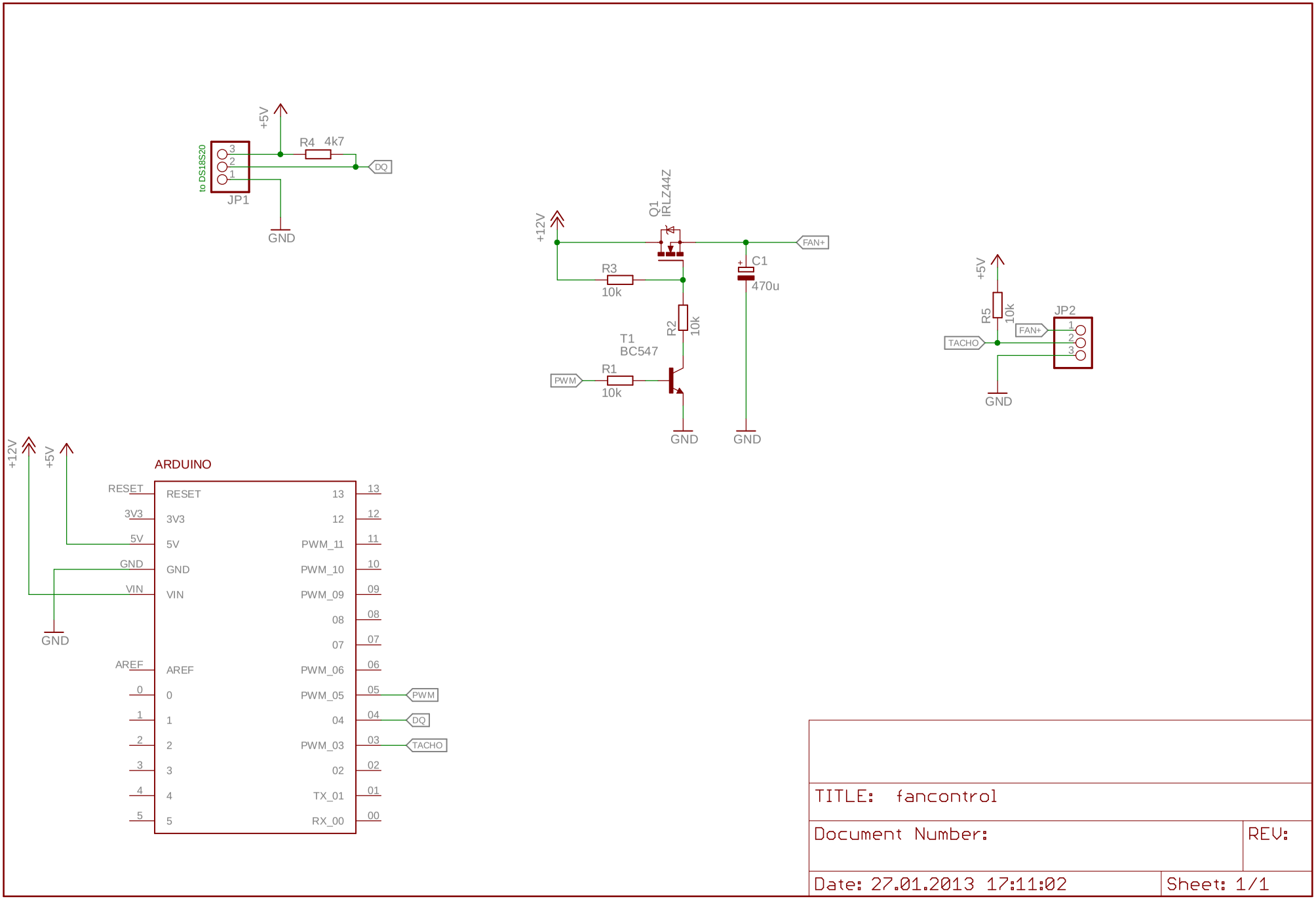
+5V
R4 4k7
DQ
to DS18S20
3
2
1
JP1
GND
+12V
Q1
IRLZ44Z
FAN+
R3
10k
C1
470u
R2
10k
T1
BC547
R1
10k
PWM
GND
GND
+5V
R5
10k
JP2
FAN+
TACHO
1
2
3
GND
+12V
+5V
ARDUINO
RESET
3V3
5V
GND
VIN
AREF
0
1
2
3
4
5
13
12
PWM_11
PWM_10
PWM_09
08
07
PWM_06
PWM_05
04
PWM_03
02
TX_01
RX_00
PWM
DQ
TACHO
GND
TITLE: fancontrol
Document Number:
REV:
Date: 27.01.2013 17:11:02
Sheet: 1/1