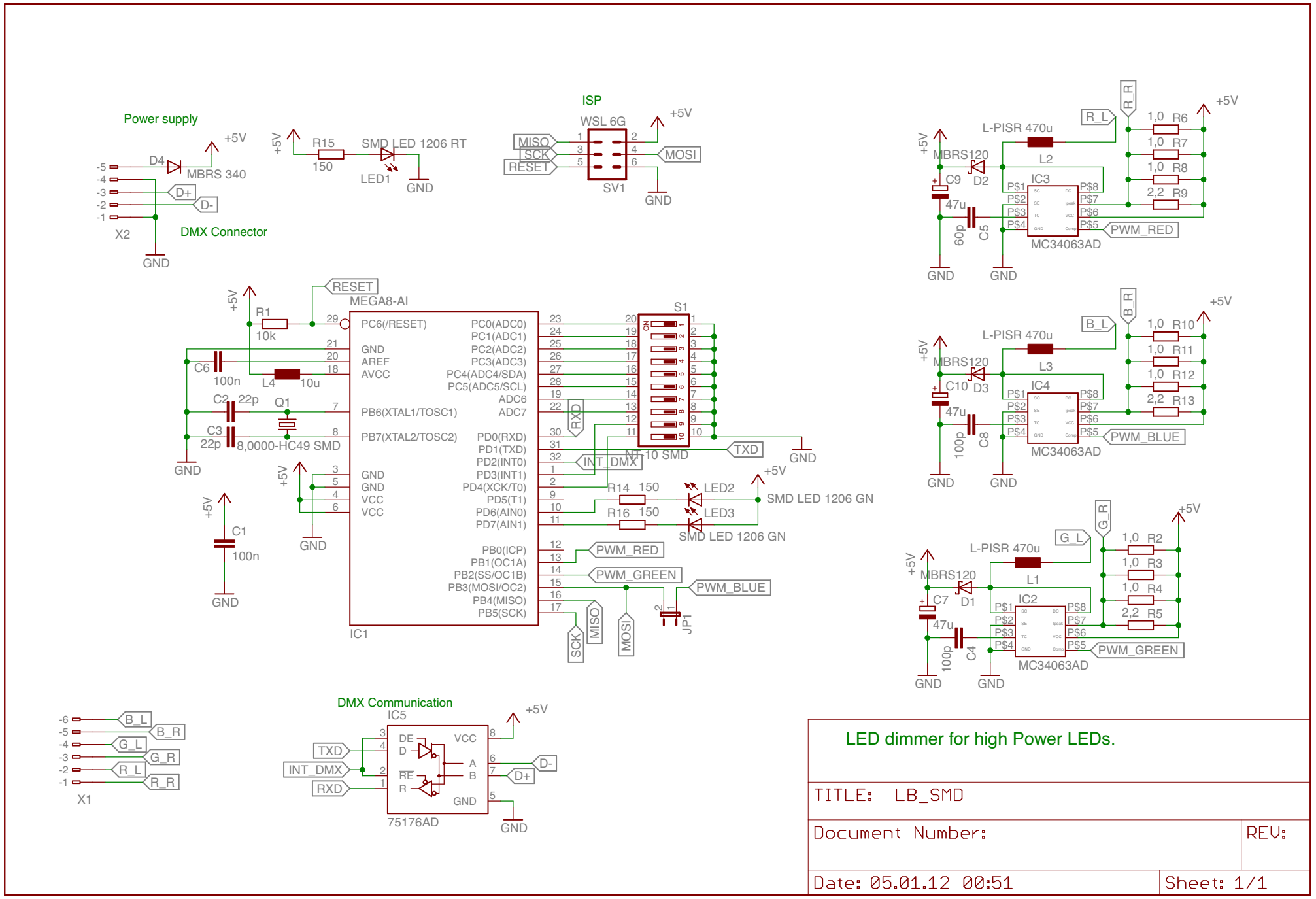

LED dimmer for high Power LEDs.

TITLE: LB_SMD

Document Number:

REV:

Date: 05.01.12 00:51

Sheet: 1/1