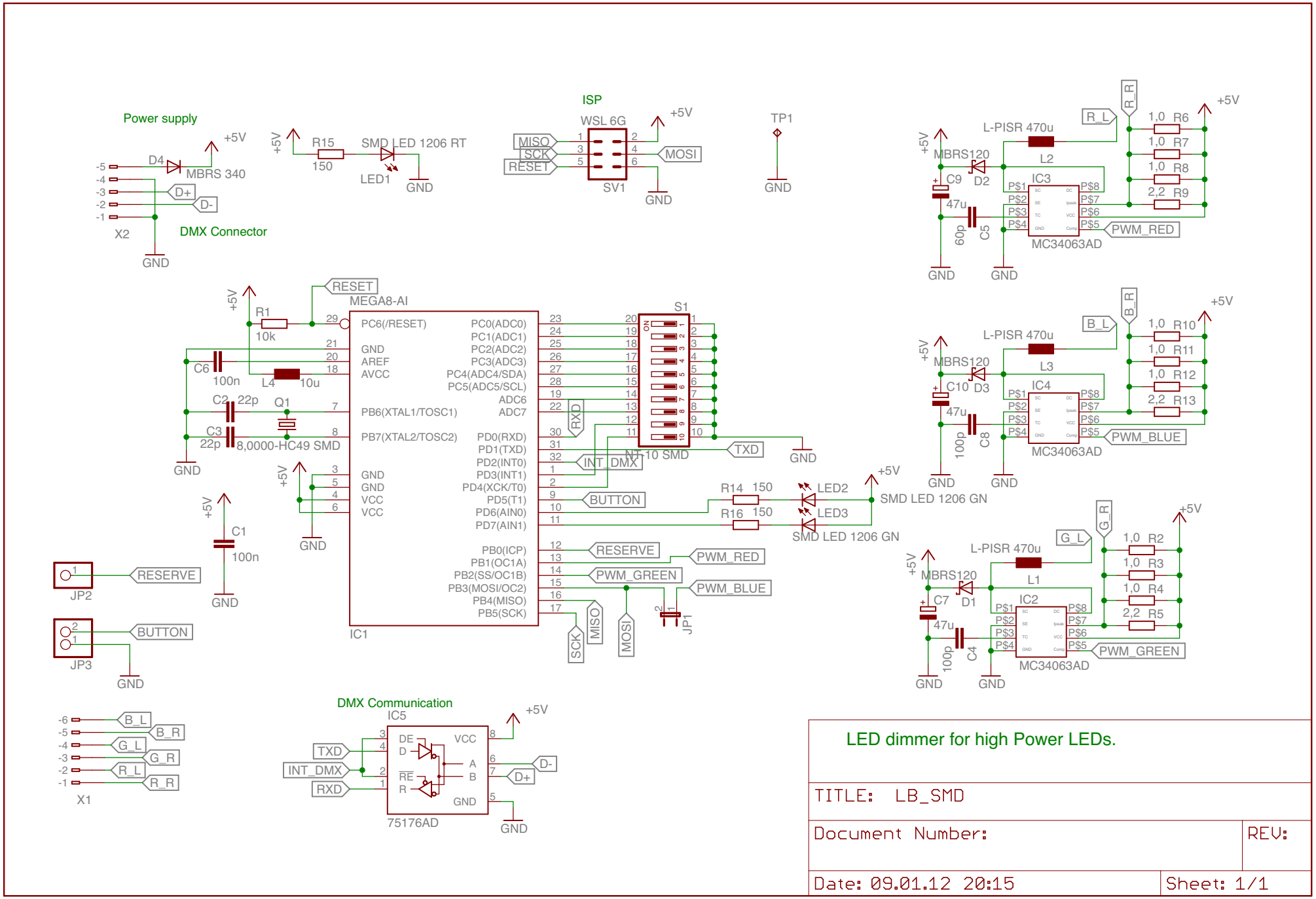

LED dimmer for high Power LEDs.

TITLE: LB_SMD

Document Number:

REV:

Date: 09.01.12 20:15

Sheet: 1/1