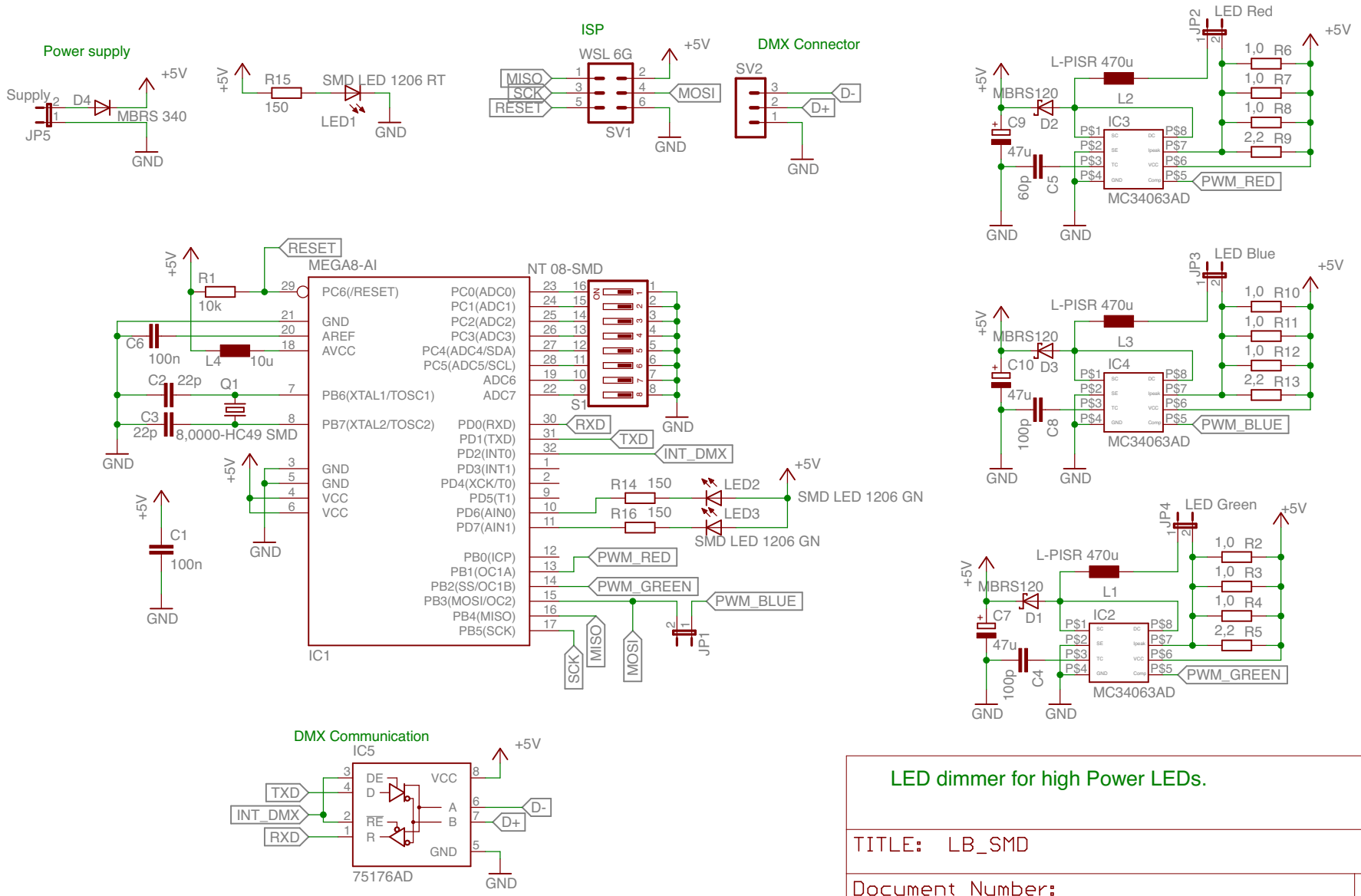

LED dimmer for high Power LEDs.

TITLE: LB_SMD

Document Number:

REV:

Date: 16.12.11 12:42

Sheet: 1/1