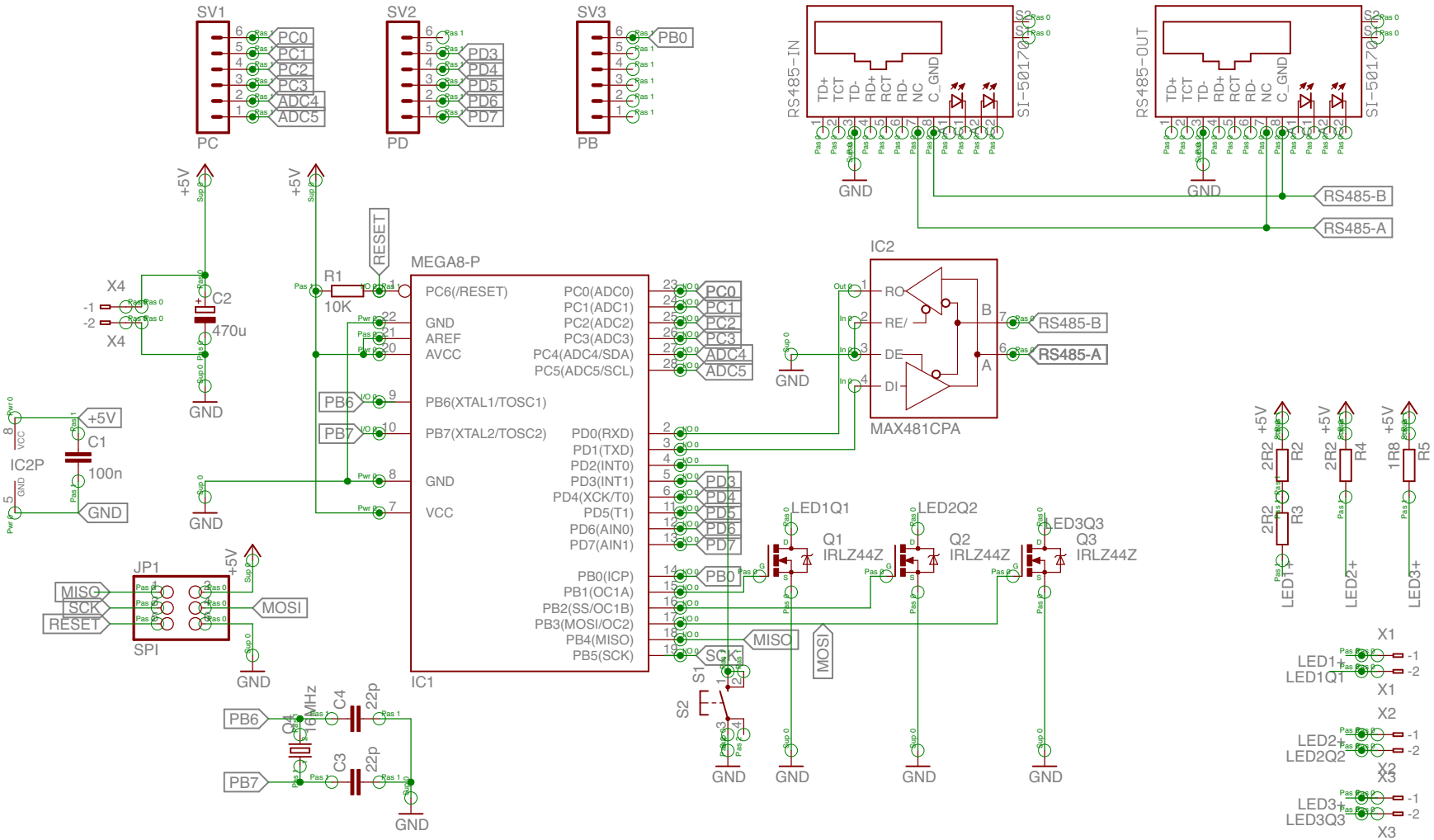
SV1
PC
PC0
PC1
PC2
PC3
ADC4
ADC5
SV2
PD
PD3
PD4
PD5
PD6
PD7
SV3
PB
PB0
RS485-IN
RS485-OUT
TD+
TCT
TD-
RD+
RCT
RD-
NC
C_GND
SI-50170
GND
RS485-B
RS485-A
+5V
X4
C2
470u
R1
10K
RESET
MEGA8-P
PC6(/RESET)
GND
AREF
AVCC
PB6(XTAL1/TOSC1)
PB7(XTAL2/TOSC2)
VCC
PC0(ADC0)
PC1(ADC1)
PC2(ADC2)
PC3(ADC3)
PC4(ADC4/SDA)
PC5(ADC5/SCL)
PD0(RXD)
PD1(TXD)
PD2(INT0)
PD3(INT1)
PD4(XCK/T0)
PD5(T1)
PD6(AIN0)
PD7(AIN1)
PB0(ICP)
PB1(OC1A)
PB2(SS/OC1B)
PB3(MOSI/OC2)
PB4(MISO)
PB5(SCK)
IC1
IC2
RO
RE/
DE
DI
MAX481CPA
IC2P
C1
100n
JP1
MISO
SCK
RESET
MOSI
SPI
Q1
IRLZ44Z
Q2
IRLZ44Z
Q3
IRLZ44Z
LED1Q1
LED2Q2
LED3Q3
S1
S2
Q4
16MHz
C4
22p
C3
22p
2R2
R2
R3
R4
1R8
R5
LED1+
LED2+
LED3+
X1
X2
X3
LED2Q2
LED3Q3