The acA720-290gm Basler ace GigE camera with a Sony IMX287 mono CMOS sensor delivers 291 frames per second at VGA resolution.

Specifications

General Specifications

	acA720-290gm
Resolution (H x V Pixels)	728 x 544 (full resolution) 720 x 540 (default resolution) You can change the resolution by changing the image ROI.
Sensor Type	Sony IMX287LLR-C Progressive scan CMOS Global shutter
Sensor Format	1/2.9"
Effective Sensor Diagonal	6.3 mm
Pixel Size (H x V)	6.90 µm x 6.90 µm

	acA720-290gm
Frame Rate (at Default Settings)	291 fps (at default resolution) 274 fps (at default settings)

	If you want to obtain the maximum frame rate at default resolution, change the Packet Size to 4000 and the Bandwidth Reserve to 5.
Product Line	ace U
Mono / Color	Mono
Image Data Interface	Fast Ethernet (100 Mbit/s) Gigabit Ethernet (1000 Mbit/s)
Pixel Formats	See Pixel Format.
Synchronization	Via hardware trigger Via software trigger Via free run
Exposure Time Control	Via hardware trigger Programmable via the camera API
Camera Power Requirements	≈3.2 W (typical) when using Power over Ethernet ≈2.9 W (typical) @ 12–24 VDC when supplied via I/O connector
I/O Lines	1 opto-coupled input line 1 opto-coupled output line 1 general purpose I/O (GPIO) line
Lens Mount	C-mount
Size (L x W x H)	42.0 mm x 29 mm x 29 mm (without lens mount or connectors) 60.3 mm x 29 mm x 29 mm (with lens mount and connectors)
Weight	<90 g

	acA720-290gm
Conformity	CE (includes RoHS), EAC, UL Listed, FCC, GenICam, GigE Vision, IP30, IEEE 802.3af (PoE), REACH, KC

	Certificates for your camera model For more information, see the Compliance section of the Basler website.
Software	Basler pylon Camera Software Suite (version 4.0 or higher) Available for Windows, Linux x86, Linux ARM, macOS, and Android
Accessories	Cables for your camera model Lenses for your camera model Additional accessories for your camera model

Spectral Response

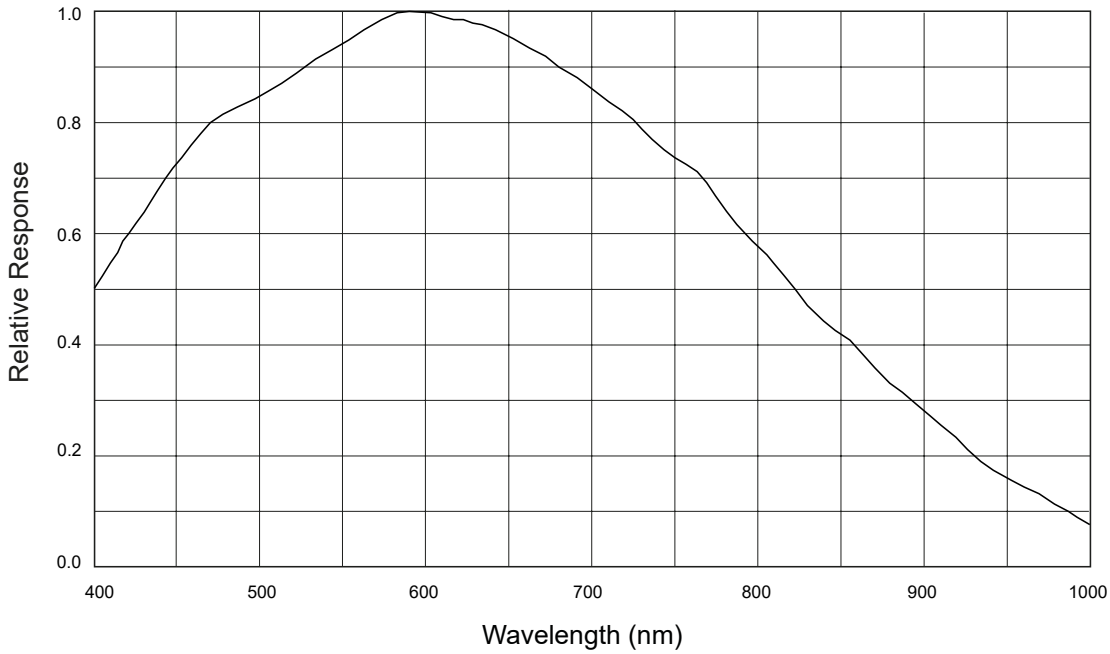

The spectral response curve excludes lens characteristics and light source characteristics.

Mechanical Specifications

Camera Dimensions and Mounting Points

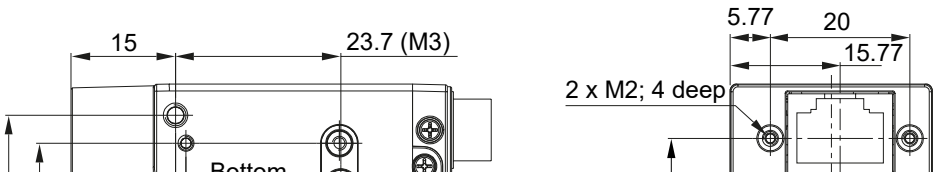

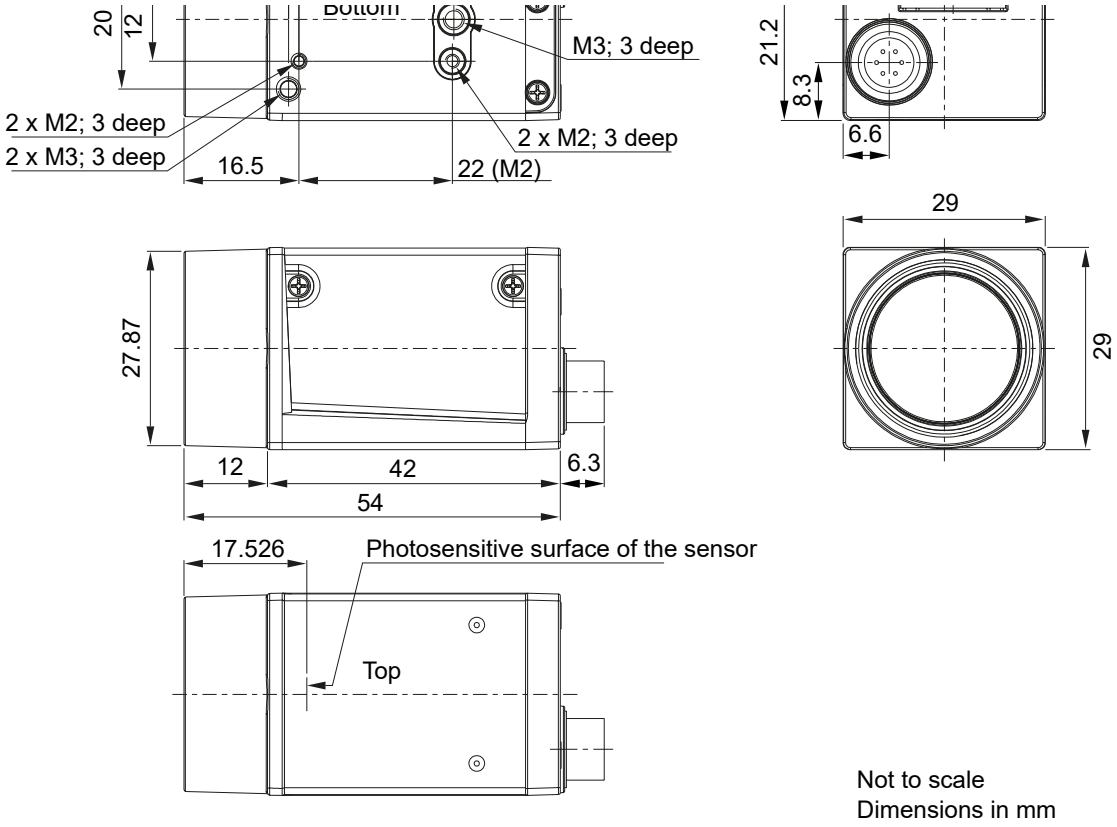

→ Download the CAD/technical drawing for your Basler camera.

Maximum Allowed Lens Intrusion

→ See Maximum Allowed Lens Intrusion.

Stress Test Results

→ See Stress Test Results.

Requirements

Environmental Requirements

Temperature and Humidity

Housing temperature during operation	0–50 °C (32–122 °F)
Humidity during operation	20–80 %, relative, non-condensing

Storage temperature	-20–80 °C (-4–176 °F)
Storage humidity	20–80 %, relative, non-condensing
Housing temperature according to UL 60950-1	max. 70 °C (158 °F)
Ambient temperature according to UL 60950-1	max. 30 °C (86 °F)

UL 60950-1 test conditions: no lens attached to camera; no heat dissipation measures; ambient temperature kept at 30 °C (86 °F).

Heat Dissipation

→ See Providing Heat Dissipation.

Electrical Requirements

WARNING – Electric Shock Hazard

Unapproved power supplies may cause electric shock. Serious injury or death may occur.

- You must use power supplies that meet the Safety Extra Low Voltage (SELV) and Limited Power Source (LPS) requirements.
- If you use a powered hub or powered switch, they must meet the SELV and LPS requirements.

WARNING – Fire Hazard

Unapproved power supplies may cause fire and burns.

- You must use power supplies that meet the Limited Power Source (LPS) requirements.
- If you use a powered hub or powered switch, they must meet the LPS requirements.

NOTICE – Incorrect voltage can damage the camera.

You must supply camera and I/O power within the safe operating voltage ranges specified below.

> Do not use negative voltage for an I/O line.

Camera Power

> **NOTICE – Dual camera power supply can damage the camera.**
>
> You must supply camera power **either** via Power over Ethernet (PoE) **or** via the camera's I/O connector.
>
> Do not use both ways of supplying camera power at the same time.

- **Power supply via Power over Ethernet (PoE)**: Power must comply with the IEEE 802.3af specification.
- **Power supply via I/O connector**: The operating voltage is 12–24 VDC. As a minimum, 10.8 VDC must be supplied. To avoid damaging the camera, a maximum of 30 VDC must not be exceeded.

Opto-Coupled I/O Input Line

Voltage	Description
30 VDC	Absolute maximum. This voltage must never be exceeded. Doing so may damage the camera and voids the warranty.
0–24 VDC	Safe operating range.
0–1.4 VDC	Indicates a logical 0 (with inverter disabled).
>1.4–2.2 VDC	Region where the logic level transition occurs; the logical state is not defined in this region.
>2.2 VDC	Indicates a logical 1 (with inverter disabled).

- **Minimum current**: 5 mA
- **Current draw**: 5–15 mA
- If the camera is connected to a PLC device, Basler recommends using a cable that adjusts the voltage level of the PLC to that of the camera.

Opto-Coupled I/O Output Line

Voltage	Description
30 VDC	Absolute maximum. This voltage must never be exceeded. Doing so may damage the camera and voids the warranty.
3.3–24 VDC	Safe operating range.
<3.3 VDC	Unreliable I/O output.

- **Leakage current:** <60 µA. Actual leakage depends on operating temperature and production spread of electronic components.
- **Maximum load current:** 50 mA
- **Minimum load current:** Not specified. Consider the following:
  - Leakage current will have a stronger effect when load currents are low.
  - Propagation delay of the output increases as load currents decrease.
  - Higher-impedance circuits tend to be more susceptible to EMI.
  - Higher currents cause higher voltage drops in long cables.

General Purpose I/O Lines

NOTICE: Applying incorrect electrical signals to the camera's GPIO line can severely damage the camera.

Before you connect any external circuitry to the GPIO line, use the Line Mode feature to configure the line for input or output.

Make sure to apply appropriate input or output signal voltages as specified below.

Operation as Input

Voltage	Description

Voltage	Description
30 VDC	Absolute maximum. This voltage must never be exceeded. Doing so may damage the camera and voids the warranty.

0–5 VDC	Safe operating range. The minimum external pull-up voltage is 3.3 VDC.
0– 0.8 VDC	Indicates a logical 0 (with inverter disabled).
>0.8– 2.0 VDC	Region where the logic level transition occurs; the logical state is not defined in this region.
>2.0 VDC	Indicates a logical 1 (with inverter disabled).

- **Current draw (high-level)**: <100 µA
- **Sink current**: Your application must be able to accept 2 mA sink current from the GPIO input line without exceeding 0.8 VDC.

Operation as Output

Voltage	Description
30 VDC	Absolute maximum. This voltage must never be exceeded. Doing so may damage the camera and voids the warranty.
3.3– 24 VDC	Safe operating range.
<3.3 VDC	Unreliable I/O output.

- **Internal pull-up resistor**: ≈2 kΩ, with open collector. Many applications will have to provide an additional pull-up resistor.
- **Residual voltage ("on" state)**: ≈0.4 V at 50 mA and 25 °C (77 °F) housing temperature. Actual residual voltage depends on operating temperature, load current, and production spread of electronic components.
- **Leakage current**: <60 µA. Actual leakage depends on operating temperature and production spread of electronic components.
- **Maximum load current**: 50 mA
- **Minimum load current**: Not specified. Consider the following:
  - Leakage current will have a stronger effect when load currents are low.
  - Propagation delay of the output increases as load currents decrease.
  - Higher-impedance circuits tend to be more susceptible to EMI.
  - Higher currents cause higher voltage drops in long cables.

For more information about the I/O lines, see the I/O Control section.

Circuit Diagrams

→ See Circuit Diagrams (Basler ace).

Cable Requirements

Ethernet Cable

- Use a high-quality Ethernet cable. Use of shielded CAT 5E or better cables with S/STP shielding is recommended.
- Use either a straight-through (patch) or a cross-over Ethernet cable.
- As a general rule, applications with longer cables or applications in harsh EMI conditions require higher category cables.
- Proximity to strong magnetic fields should be avoided.
- Basler recommends using Ethernet cables from the Basler Vision Components range.

I/O Cable

- The I/O cable must be shielded.
- The I/O cable must have a cross-section of at least 0.14 mm² (close to AWG26).
- Use a twisted pair wire cable.
- Maximum recommended cable length: 10 m
- Camera-side connector: Hirose micro plug (part number HR10A-7P-6S) or equivalent
- Proximity to strong magnetic fields should be avoided.
- If you are supplying power to the camera via Power over Ethernet, the I/O cable will not be used to supply power. However, you can still use the cable to connect to the I/O lines.
- Basler recommends using I/O cables from the Basler Vision Components range:
  - GPIO cable, 10 m (yellow cable): For use with the GPIO lines of your camera. Also provides camera power. To avoid interferences due to crosstalk, the opto-coupled I/O lines are not connected.
  - Opto-I/O cable, 10 m (blue cable): For use with the opto-coupled I/O lines of your camera. To avoid interferences due to crosstalk, the GPIO lines are not connected. Does not provide camera power. Therefore, when using this cable, you must provide power via Power over Ethernet (PoE).
  - Opto-GPIO Y-cable, 2 x 10 m (yellow-blue cable): Allows you to use the GPIO lines and the opto-coupled I/O lines simultaneously without interferences due to crosstalk. There are two separate wires to split both I/O types. Also provides camera power.
  - Power-I/O cable, 10 m (gray cable): For use with the opto-coupled I/O lines of your camera. Unlike the opto-I/O cable (blue cable, see above), this cable allows you to provide camera power. However, because all lines are connected, crosstalk between the GPIO lines and the opto-coupled I/O lines may occur.
  - Power-I/O PLC+ cable, 10 m (gray cable): For use with the opto-coupled I/O lines

of Basler cameras connected to a programmable logic controller (PLC). It adapts the signal level for zero voltage from PLC level (\<8.4 VDC) to TTL level (\<1.4 VDC).

Physical Interface

Camera Connectors

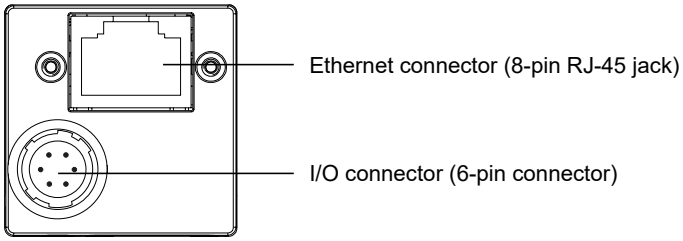

Ethernet Connector

- 100/1000 Mbit/s Ethernet connection to the camera
- If power is not supplied via I/O connector: Power over Ethernet (PoE)
- 8-pin RJ-45 jack
- Recommended mating connector: 8-pin RJ-45 plug (snap-in or with locking screws)
- When using locking screws, note the horizontal orientation of the screws.

I/O Connector

- If power is not supplied via Power over Ethernet (PoE): Power supply
- Hirose micro receptacle (part number HR10A-7R-6PB)
- Recommended mating connector: Hirose micro plug (part number HR10A-7P-6S)

Connector Pin Numbering and Assignments

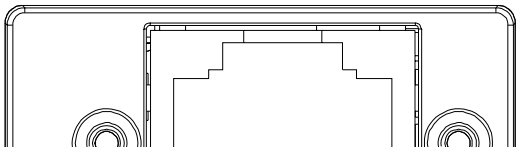

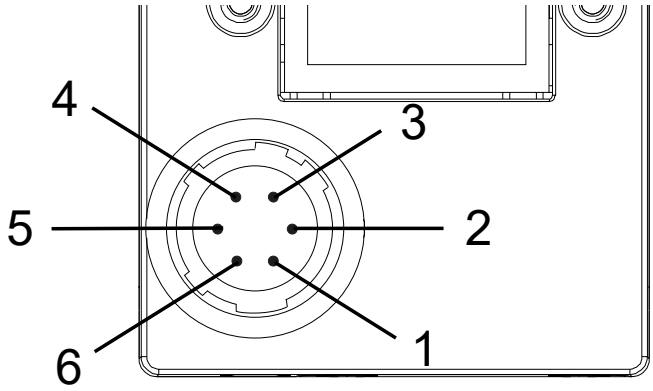

Pin	Line	Function
1	-	12-24 VDC camera power
2	Line 1	Opto-coupled I/O input line
3	Line 3	General purpose I/O (GPIO) line
4	Line 2	Opto-coupled I/O output line
5	-	Ground for opto-coupled I/O lines
6	-	Ground for camera power and GPIO lines

Precautions

→ See Safety Instructions (ace, ace 2).

Installation

→ See Camera Installation.

Features

→ See Features.