OP-AMP RULES

Author: William Deng
Editor: Jim Chen

Date Created: 05/23/22
Date Edited:

Version 1.0

Abstract

In this SOP, the principle of operation of operational amplifiers are documented. The operational amplifiers available in the lab are listed.

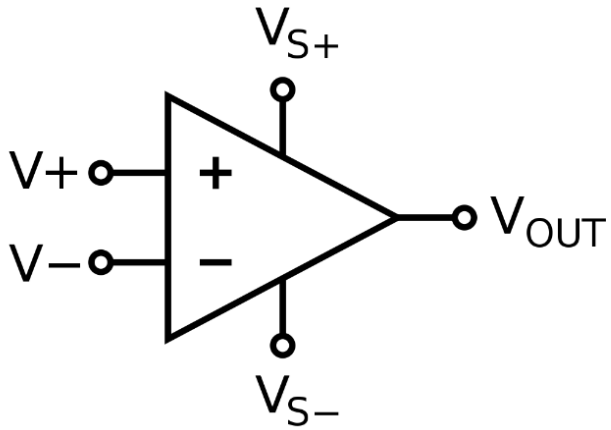

Contents

1 Operational Amplifier Principle of Operation 3

2 Operational Amplifiers at the Lab 4

List of Figures

[1] *Footnote 1 etc.*

[2] *Footnote 2 etc.*

1 Operational Amplifier Principle of Operation

Operational amplifiers (op-amps for short) are DC-coupled amplifiers with a differential input and a single-ended output. The standard schematic for an op-amp tends to look something like:

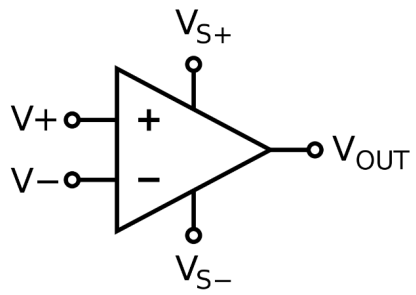

where V_+ and V_- are its two input voltages and V_{out} is its output voltage. The positive input voltage V_+ is referred to as the non-inverting input of the op-amp whereas the negative input voltage V_- is referred to as the inverting input of the op-amp. In general, every op-amp has a dimensionless property called its open-loop gain A. The output voltage V_{out} of the op-amp is related to its differential input voltage V_+ V_- by its open-loop gain A via the simple proportionality relationship:

$$V_{out} = A(V_+ - V_-)$$

Typical op-amps in the real world tend to have open-loop gain on the order of $A \sim 10^5$. Op-amps are also active circuit components, which means that they require an external power source in order to operate. This is represented in the above diagram by the two leads to V_{S+} and V_{S-}. These power supply voltages not only power the op-amp, but also bound the output voltage V_{out} of the op-amp according to the inequalities:

$$V_{S-} \leqslant V_{out} \leqslant V_{S+}$$

If the op-amp's output voltage V_{out} can indeed swing anywhere within this closed interval $[V_{S-}, V_{S+}]$, then we say that it is a rail-to-rail op-amp (in the real world, some op-amps might be imperfectly manufactured and therefore might be unable to actually achieve this full range that they should theoretically be able to achieve). Typical power supply voltages V_{S-},V_{S+} for op-amps might be like $\pm 15v$, in which case, assuming an open-loop gain of $A = 10^5$, means that the differential input voltage V_{S-}-V_{S+} is constrained to lie within the interval:

$$-150\upsilon v \leqslant V_+ - V_- \leqslant -150\upsilon v$$

From a practical perspective then, because $150\upsilon v$ is a relatively tiny voltage, it is generally safe to just assume that the two inputs of the op-amp are actually at the same voltage, i.e. assume that V_+=V_-. This is logically equivalent to the assumption that the open-loop gain of the op-amp is A = ∞, and indeed for an ideal op-amp, we say that it has infinite open-loop gain to refer to this notion that we can pretend its two inputs are at the same voltage as long as its open-loop gain A is large (as it tends to be). When one of the inputs (usually the non-inverting input) is connected to ground, and so is at 0 v, by the logic above, the inverting input must also be at 0 v, and hence is referred to as a virtual ground. Although op-amps are meant to amplify signals, it is generally not a good idea to just use an op-amp in and of itself as a differential amplifier, because the open-loop gain A of an op-amp tends to be difficult to manufacture precisely. Instead, there are a variety of ingenious circuits (e.g. inverting

amplifiers, non-inverting amplifiers, voltage followers, current-voltage converters, summing amplifiers, etc.) that can be built using op-amps which essentially sidestep this limitation and use other components like resistors (whose resistance values are easier to manufacture precisely) in order to more reliably get the precise degree of amplification that one desires. Another important property of ideal op-amps is that they have infinite input impedance. This simply means that both its inverting and its non-inverting inputs draw in zero electric current. To summarize then, there are essentially two golden rules to keep in mind whenever one is designing or analyzing a circuit involving operational amplifiers:

1. $V_+ = V_-$
2. $I = 0$

2 Operational Amplifiers at the Lab

- TL074BCN (quadamp)
- LM-358N
- MC1458SP
- TLO71CP
- TLO71CN
- UA741CP

[1]

REFERENCES

[1] Operational amplifier.
https://en.wikipedia.org/wiki/Operational_amplifier#:~:text=An%20operational%20amplifier%20(often%20op,%2C%20a%20single%2Dended%20output.