OCP Device Attestation

Fabrizio D’Amato (AMD)

Giri Mandyam (AMD)

Parvathi Bhogaraju (Microsoft)

The Evidence Format Problem

Why Convergence Matters

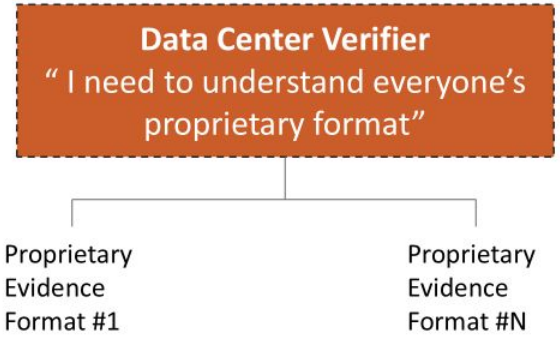

- The cost:
  - Custom parser for each SoC vendor
  - No code reuse across integrations
  - Security review for each format
  - Integration time measured in months

OCP-EAT Profile Solution

Solving Evidence Fragmentation

A single evidence format that every SoC vendor can adopt

Foundation: IETF EAT RFC 9711 – RATS Architecture RFC 9334

Early Adopter: Caliptra

Result: True interoperability

Single Standardized Format

Simplified Verification

Concise Evidence Architecture

Core Innovation:

Claims Encapsulation using **CoRIM Reference Triple semantics**

Why This Matters:

- 1:1 Mapping **reference** <-> **evidence**
- No complex transformation logic
- Appraisal becomes simple matching
- Based on TCG published standard

Example:

Reference: {env: “Bootloader", measure: "0xABC"}

Evidence: {env: “Bootloader", measure: "0xABC"}

Result: ✓ Match

OCP EAT Format

- `eat-nonce` is populated with the **requester-provided nonce**
- `measurements` claim carries the **TCG DICE concise-evidence-map** (CBOR-encoded)
- All Attester device's **Target Environment claims** are reported as an array of **`evidence-triple-records`**
- **`evidence-triple-record`** format aligns with **`CoRIM reference-triple-record`**
- This alignment **simplifies appraisal process**

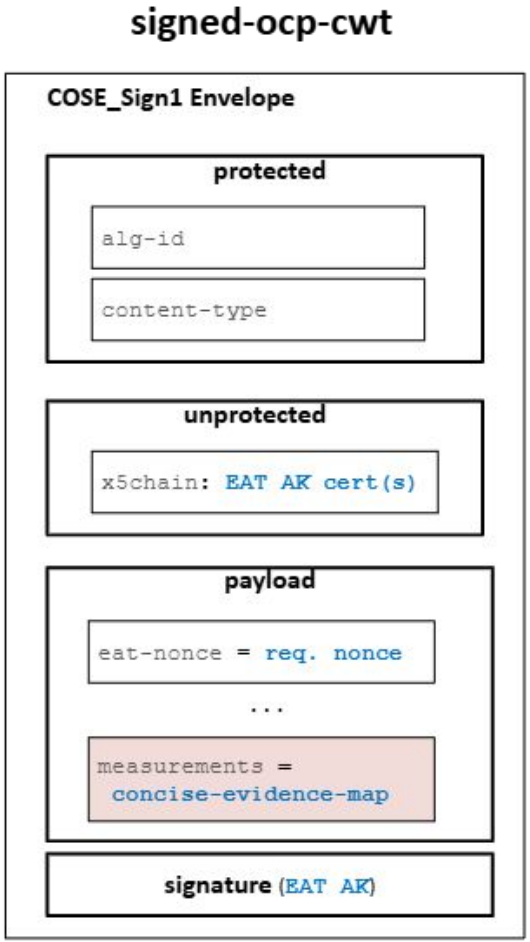

OCP-EAT Profile – Evidence Flow

How Evidence Maps to Reference Values

Standard EAT Claims

OCP EAT Token

```
eat_profile: <OCP-assigned-OID>
eat_nonce: 0x4d49544d2d5465737...
issuer: "Platform-AK-0001" (optional)
measurements: <CBOR-encoded concise-evidence>
```

↓ **CBOR decode**

TCG Concise Evidence

Concise-Evidence Structure

```
evidence-blocks: [{
  evidence-triples: [
    [{class: "Bootloader"}, {digest: sha256:abc123...}]
    [{class: "Firmware"}, {digest: sha384:def456...}]
    [{class: "OS"}, {digest: sha256:789abc...}]
  ]}]
```

Key Innovation: Same triple format as CoRIM = Direct 1:1 verification

OCP-EAT in Action: Trusted I/O Devices

Trusted I/O devices can be memory-mapped to confidential VMs

- Such devices must be attestable for CVMs to be able to safely extend their memory to such devices

PCI-SIG has defined TDISP (Trusted Device Interface Security Protocol) to retrieve fresh attestations from the device

- Based on the SPDM (Security Protocol and Data Model) protocol defined by DMTF
- SPDM can run over TDISP, but SPDM can also be used for non PCIe devices

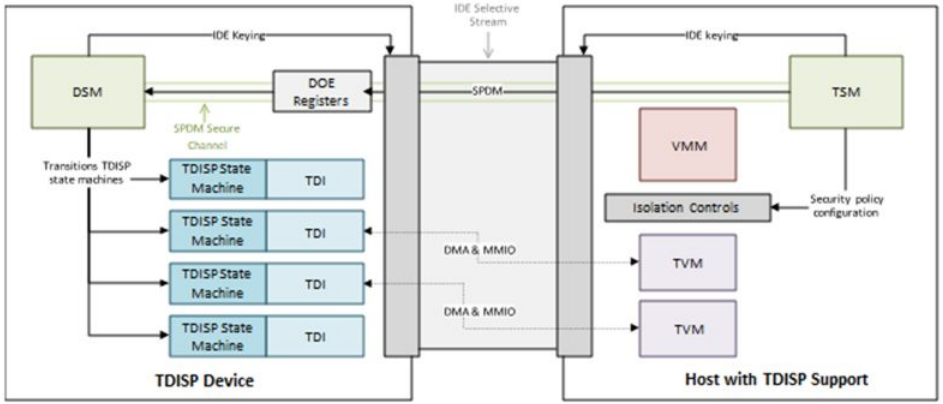

Retrieving the OCP-EAT from a TIO Device

- An OCP-EAT token can be requested from device using SPDM's current GET_MEASUREMENT feature
  - Certificate(s) to verify token are delivered in-band: EAT is derived from COSE, which has a mechanism for including cert chain
- Sample OCP-EAT claims that can appear in token

```
{
        / EAT-profile /     265:h' 2b0601040182e42b0103      /OID: 1.3.6.1.4.1.42623.1.3 /
        / eat-nonce /       10:h' 25840-… 64 byte nonce …-20
        / dbgstat /         263:2                            /Debug disabled /
        / measurement /     273:[                            /Measurements in concise evidence form/
                                ([                           / Byte string representation of 2-entry array /
                                        '10571'              / CoAP Content Profile for concise evidence /
                                        {… concise measurements … }
                                ])
```

OCP-EAT Acquisition over SPDM

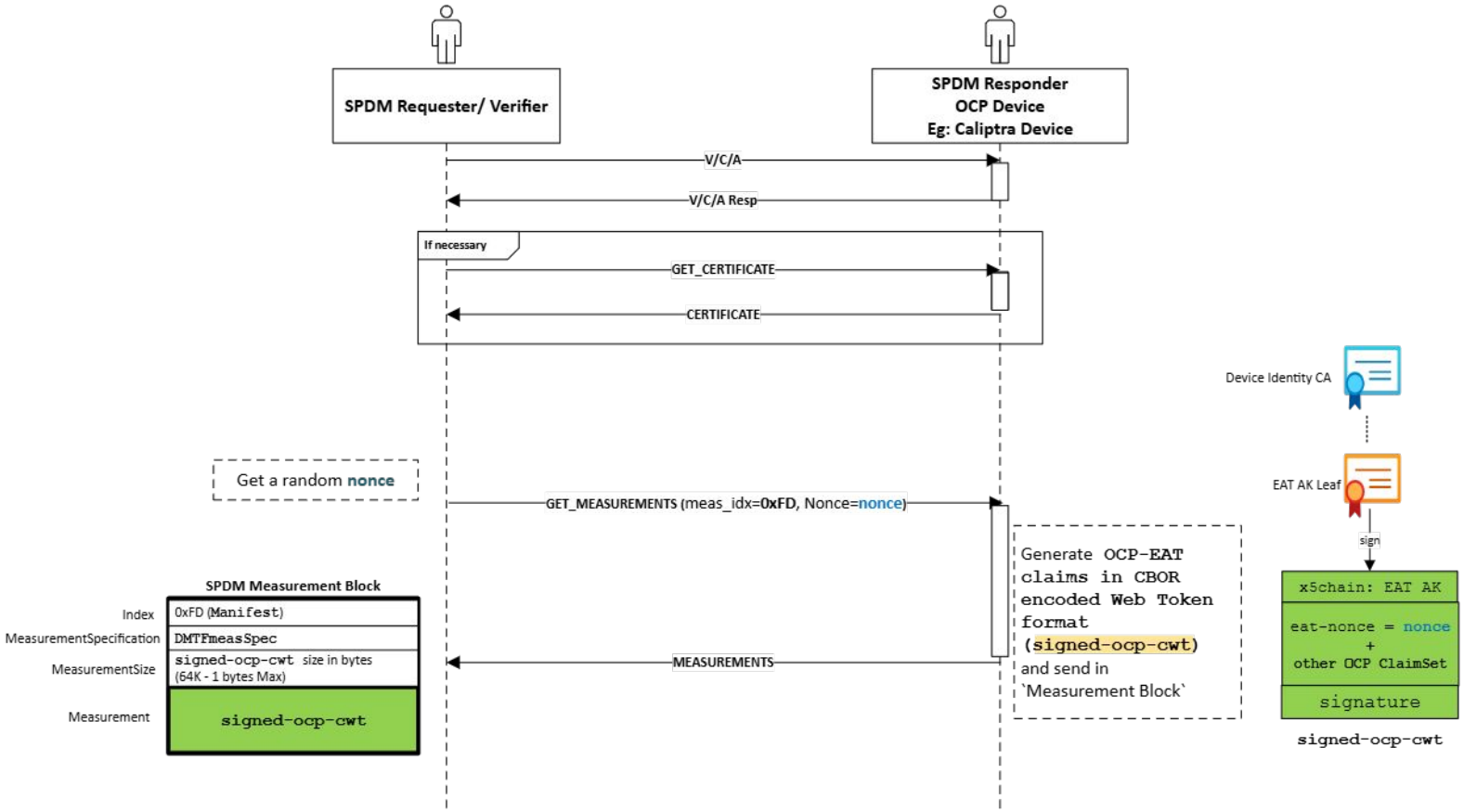

OCP EAT Verifier

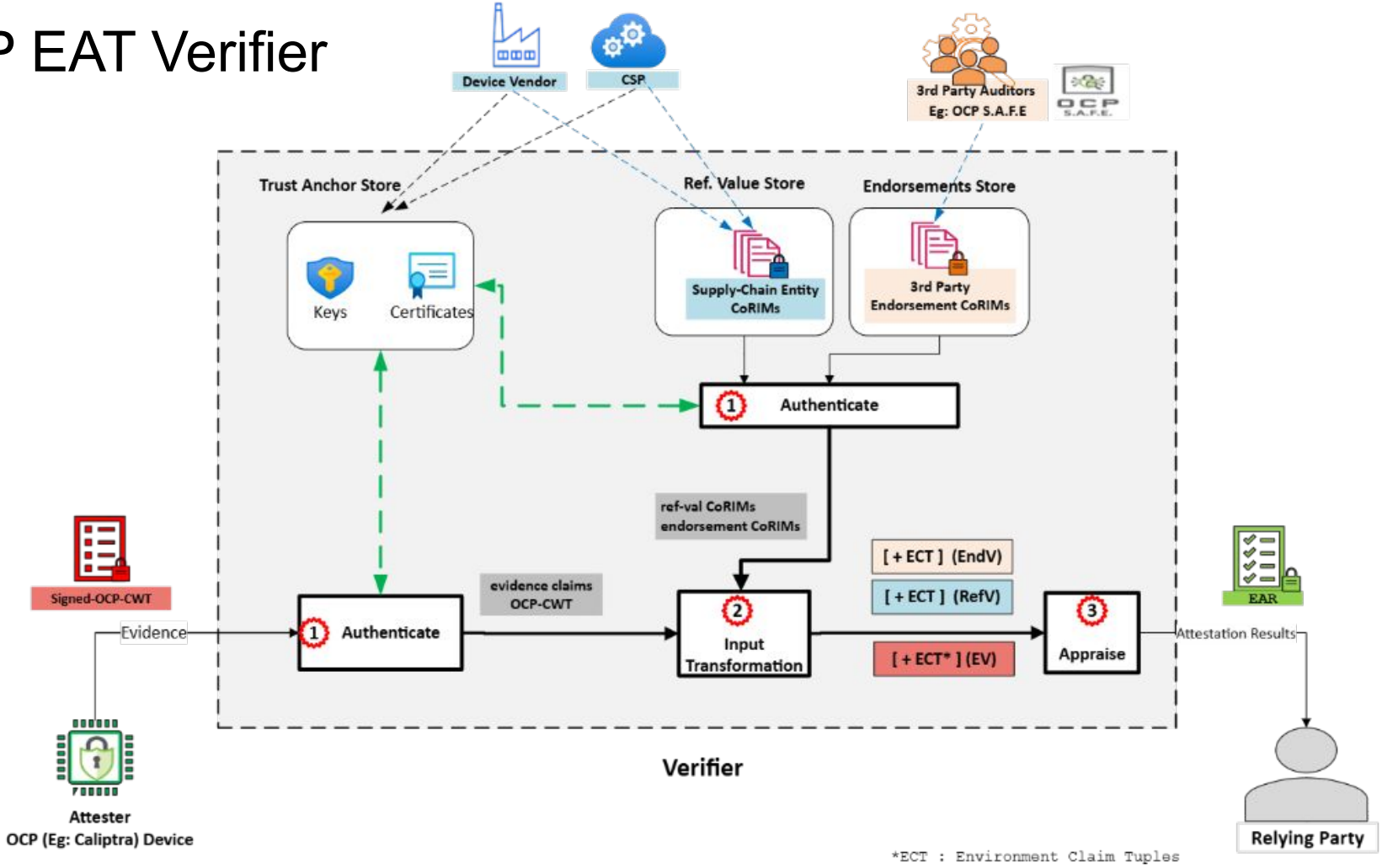

1. Authenticate

- **Uniform Authentication Model**
  - Authenticate **Evidence (EAT)**, **Reference Value CoRIMs**, and **Endorsement CoRIMs** by verifying their **COSE_Sign1 signatures**
  - Validate **signer identity and integrity** using the **Provisioned Trust Anchor Store**
  - Provides **uniform authentication mechanism for all attestation inputs** prior to appraisal

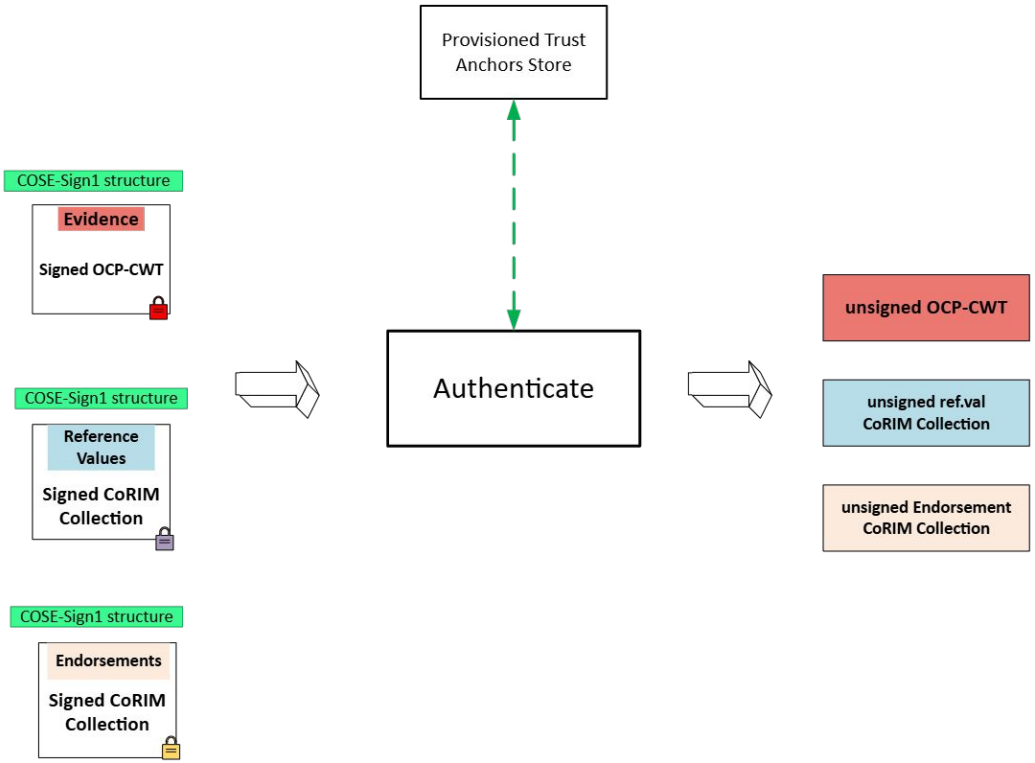

2. Input Transformation

Transforming Evidence, Reference, and Endorsements into **unified format (ECT)** for Appraisal

Input Messages

TCG Concise Evidence

```
ev-triples-map: [{
        evidence-triples : [
            env: {class_id: "Firmware", vendor: "ACME corp", model:"DeviceX"},
            ev-claims: [{digest: sha384:abc123..}]
            env: {class_id: "Bootloader", vendor: "ACME corp", model:"DeviceX"},
            ev-claims: [{digest: sha384:def456..}]
            env: {class_id: "OS", vendor: "ACME corp", model:"DeviceX"},
            ev-claims: [{digest: sha384:aabb77..}]
        ]}]
```

CoMID Tag from Reference Value CoRIM(s)

```
triples-map: [{
        referencence-triples : [
            env: {class_id: "Firmware", vendor: "ACME corp", model:"DeviceX"},
            ref-claims: [{digest: sha384:abc123..}]
            env: {class_id: "Bootloader", vendor: "ACME corp", model:"DeviceX"},
            ref-claims: [{digest: sha384:def456..}]
            env: {class_id: "OS", vendor: "ACME corp", model:"DeviceX"},
            ref-claims: [{digest: sha384:aabb77..}]
        ]}]
```

CoMID Tag from OCP S.A.F.E CoRIM(s)

```
triples-map: [{
            conditional-endorsement-triples: [
            env: {class_id: "Firmware", vendor: "ACME corp", model:"DeviceX"},
            claims-list: [{ocp-safe-sfr-map:  XXX}]
            env: {class_id: "Bootloader", vendor: "ACME corp", model:"DeviceX"},
            claims-list: [{ocp-safe-sfr-map: XXX}]
            env: {class_id: "OS", vendor: "ACME corp", model:"DeviceX"},
            claims-list: [{ocp-safe-sfr-map: XXX}]
        ]}]
```

Input Transformation

Uniformly transformed Input Messages

Attestation Evidence ECTs

```
env : {class_id: "Firmware", vendor: "ACME corp", model:"DeviceX"}
element_list: [{digest: sha384:abc123..}]
env : {class_id: "Bootloader", vendor: "ACME corp", model:"DeviceX"}
element_list: [{digest: sha384:def..}]
env: {class_id: "OS", vendor: "ACME corp", model:"DeviceX"},
element-list: [{digest: sha384:aabb77..}]
```

Reference Value ECTs

```
env : {class_id: "Firmware", vendor: "ACME corp", model:"DeviceX"}
element_list: [{digest: sha384:abc123..}]
env: {class_id: "Bootloader", vendor: "ACME corp", model:"DeviceX"}
element_list: [{digest: sha384:def456..}]
env: {class_id: "OS", vendor: "ACME corp", model:"DeviceX"}
element_list: [{digest: sha384:aabb77..}]
```

OCP S.A.F.E Endorsement ECTs

```
env : {class_id: "Firmware", vendor: "ACME corp", model:"DeviceX"}
element_list: [{ocp-safe-sfr-map: XXX}]
env: {class_id: "Bootloader", vendor: "ACME corp", model:"DeviceX"}
element_list: [{ocp-safe-sfr-map: XXX}]
env: {class_id: "OS", vendor: "ACME corp", model:"DeviceX"}
element_list: [{ocp-safe-sfr-map: XXX}]
```

3. Appraise

- Compare the evidence against acceptable reference values
- Augment the endorsements (if any) in the attestation result (eg. **`ocp-safe-sfr-map`**)

Uniformly transformed Input Messages

Attestation Results to Relying Party

Attestation Evidence ECTs

```
env : {class_id: "Firmware", vendor: "ACME corp", model:"DeviceX"}
element_list: [{digest: sha384:abc123..}]
```

```
env : {class_id: "Bootloader", vendor: "ACME corp", model:"DeviceX"}
element_list: [{digest: sha384:def..}]
```

```
env: {class_id: "OS", vendor: "ACME corp", model:"DeviceX"},
element-list: [{digest: sha384:aabb77..}]
```

Reference Value ECTs

```
env : {class_id: "Firmware", vendor: "ACME corp", model:"DeviceX"}
element_list: [{digest: sha384:abc123..}]
```

```
env: {class_id: "Bootloader", vendor: "ACME corp", model:"DeviceX"}
element_list: [{digest: sha384:def456..}]
```

```
env: {class_id: "OS", vendor: "ACME corp", model:"DeviceX"}
element_list: [{digest: sha384:aabb77..}]
```

OCP S.A.F.E Endorsement ECTs

```
env : {class_id: "Firmware", vendor: "ACME corp", model:"DeviceX"}
element_list: [{ocp-safe-sfr-map: XXX}]
```

```
env: {class_id: "Bootloader", vendor: "ACME corp", model:"DeviceX"}
element_list: [{ocp-safe-sfr-map: XXX}]
```

```
env: {class_id: "OS", vendor: "ACME corp", model:"DeviceX"}
element_list: [{ocp-safe-sfr-map: XXX}]
```

Appraise

```
env : {class_id: "Firmware", vendor: "ACME corp", model:"DeviceX"}
state: [{digest: sha384:abc123..}, {ocp-safe-sfr-map: "XXX"}]
result: "PASS"
```

```
env : {class_id: "Bootloader", vendor: "ACME corp", model:"DeviceX"}
state: [{digest: sha384:def..}, {ocp-safe-sfr-map: "XXX"}]
result: "PASS"
```

```
env: {class_id: "OS", vendor: "ACME corp", model:"DeviceX"},
state: [{digest: sha384:aabb77..}, {ocp-safe-sfr-map: "XXX"}]
result: "PASS"
```