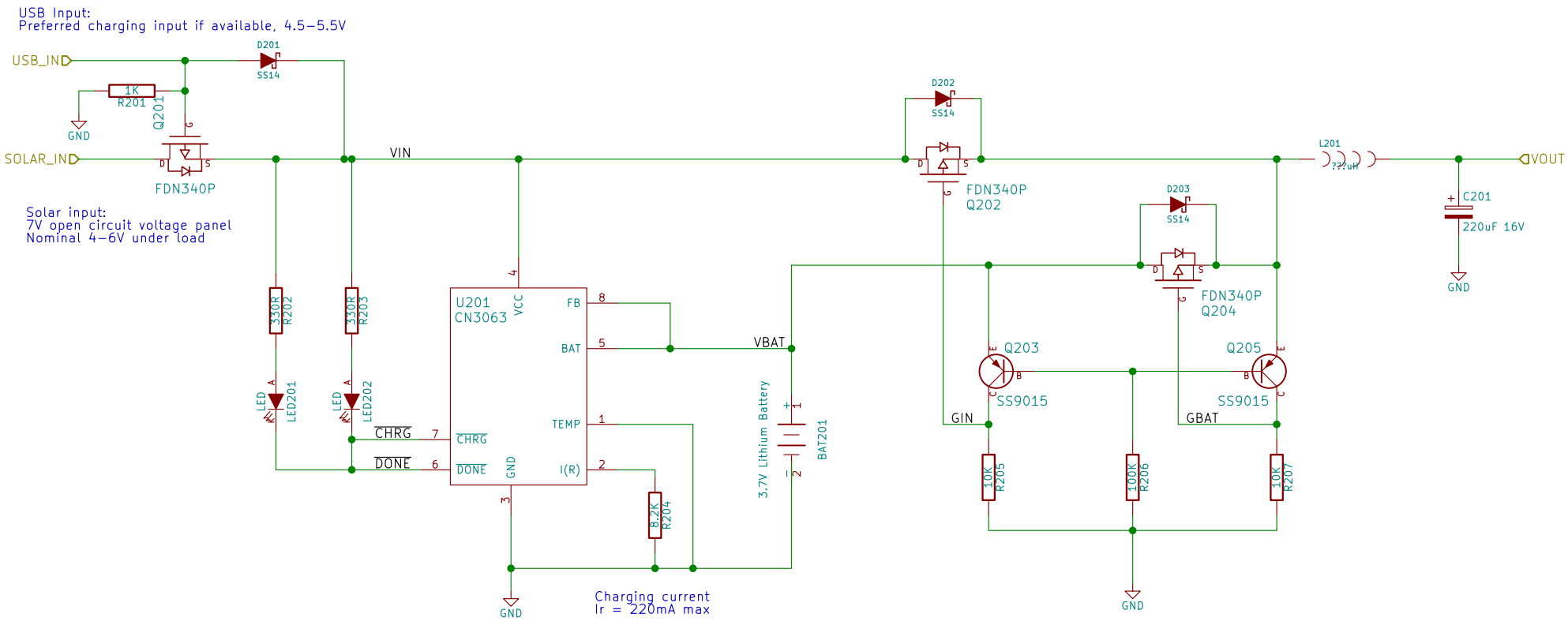

"Ideal Diode OR" circuit derived from "Type 3" shown at
http://www.jiggerjuice.info/electronics/projects/power/ideal-diode.html

See attached LTSpice model file.

Sheet: /Power/ File: Power.sch		
Title:		
Size: A4	Date:	**Rev:**
KiCad E.D.A. kicad 0.201510281901+628530ubuntu15.10.1-product		Id: 2/2