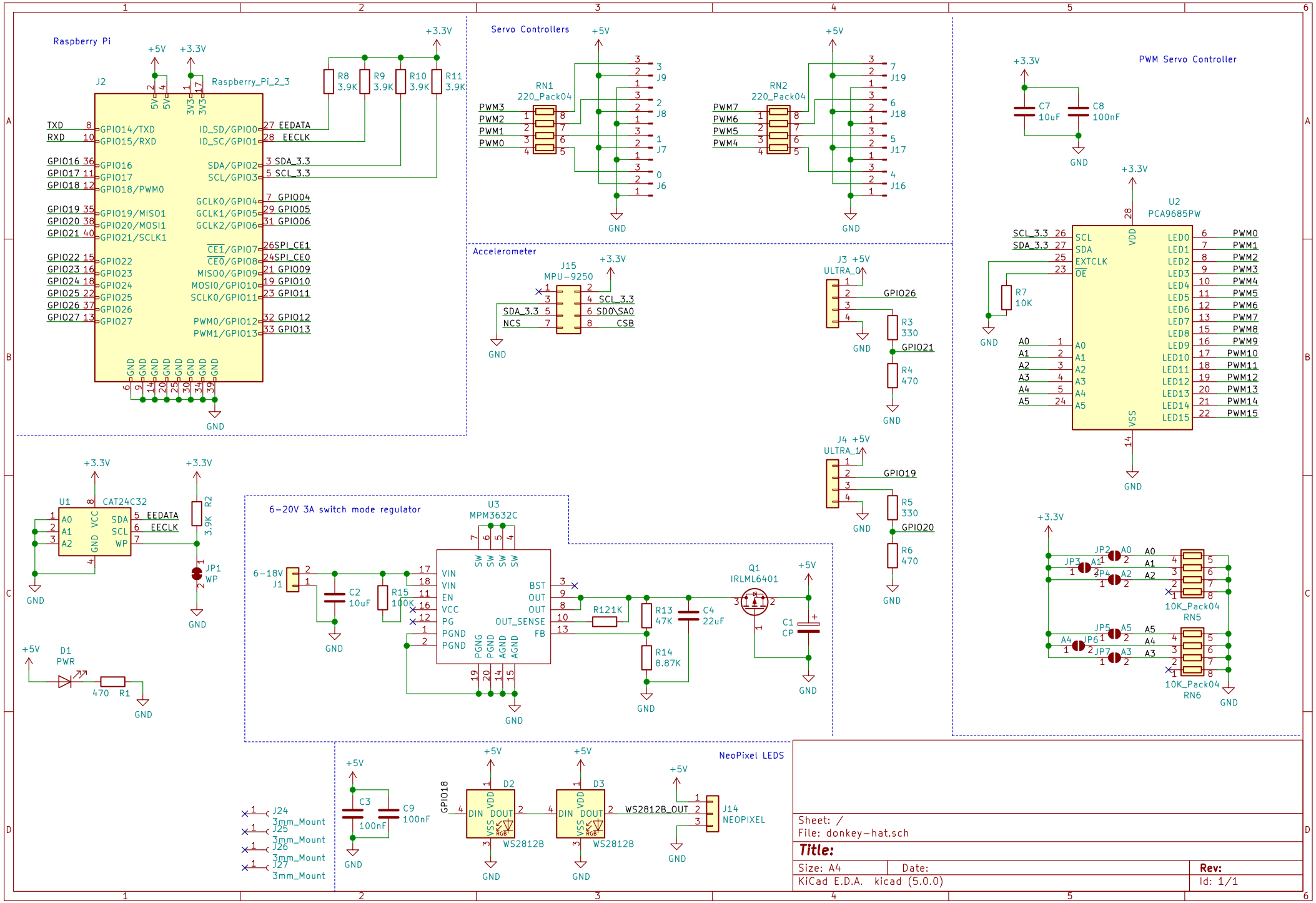
Raspberry Pi
J2
Raspberry_Pi_2_3
TXD 8 GPIO14/TXD
RXD 10 GPIO15/RXD
GPIO16 36 GPIO16
GPIO17 11 GPIO17
GPIO18 12 GPIO18/PWM0
GPIO19 35 GPIO19/MISO1
GPIO20 38 GPIO20/MOSI1
GPIO21 40 GPIO21/SCLK1
GPIO22 15 GPIO22
GPIO23 16 GPIO23
GPIO24 18 GPIO24
GPIO25 22 GPIO25
GPIO26 37 GPIO26
GPIO27 13 GPIO27
ID_SD/GPIO0 27 EEDATA
ID_SC/GPIO1 28 EECLK
SDA/GPIO2 3 SDA_3.3
SCL/GPIO3 5 SCL_3.3
GCLK0/GPIO4 7 GPIO04
GCLK1/GPIO5 29 GPIO05
GCLK2/GPIO6 31 GPIO06
CE1/GPIO7 26 SPI_CE1
CE0/GPIO8 24 SPI_CE0
MISO0/GPIO9 21 GPIO09
MOSI0/GPIO10 19 GPIO10
SCLK0/GPIO11 23 GPIO11
PWM0/GPIO12 32 GPIO12
PWM1/GPIO13 33 GPIO13
+5V
+3.3V
R8 3.9K
R9 3.9K
R10 3.9K
R11 3.9K
GND
Servo Controllers
RN1 220_Pack04
RN2 220_Pack04
PWM3
PWM2
PWM1
PWM0
PWM7
PWM6
PWM5
PWM4
J9
J8
J7
J6
J19
J18
J17
J16
Accelerometer
J15 MPU-9250
SDA_3.3
NCS
SCL_3.3
SD0\SA0
CSB
J3 +5V ULTRA_0
GPIO26
R3 330
GPIO21
R4 470
J4 +5V ULTRA_1
GPIO19
R5 330
GPIO20
R6 470
PWM Servo Controller
C7 10uF
C8 100nF
U2 PCA9685PW
SCL_3.3
SDA_3.3
SCL
SDA
EXTCLK
OE
R7 10K
A0
A1
A2
A3
A4
A5
LED0
LED1
LED2
LED3
LED4
LED5
LED6
LED7
LED8
LED9
LED10
LED11
LED12
LED13
LED14
LED15
PWM0
PWM1
PWM2
PWM3
PWM4
PWM5
PWM6
PWM7
PWM8
PWM9
PWM10
PWM11
PWM12
PWM13
PWM14
PWM15
VDD
VSS
JP2
JP3
JP4
JP5
JP6
JP7
10K_Pack04 RN5
10K_Pack04 RN6
U1 CAT24C32
SDA
SCL
WP
VCC
R2 3.9K
JP1 WP
D1 PWR
470 R1
6-20V 3A switch mode regulator
U3 MPM3632C
6-18V J1
C2 10uF
R15 100K
VIN
EN
VCC
PG
PGND
BST
OUT
OUT_SENSE
FB
SW
AGND
R121K
R13 47K
R14 8.87K
C4 22uF
Q1 IRLML6401
C1 CP
J24 3mm_Mount
J25 3mm_Mount
J26 3mm_Mount
J27 3mm_Mount
C3 100nF
C9 100nF
NeoPixel LEDS
GPIO18
D2 WS2812B
D3 WS2812B
DIN
DOUT
WS2812B_OUT
J14 NEOPIXEL
Sheet: /
File: donkey-hat.sch
Title:
Size: A4
Date:
Rev:
KiCad E.D.A. kicad (5.0.0)
Id: 1/1