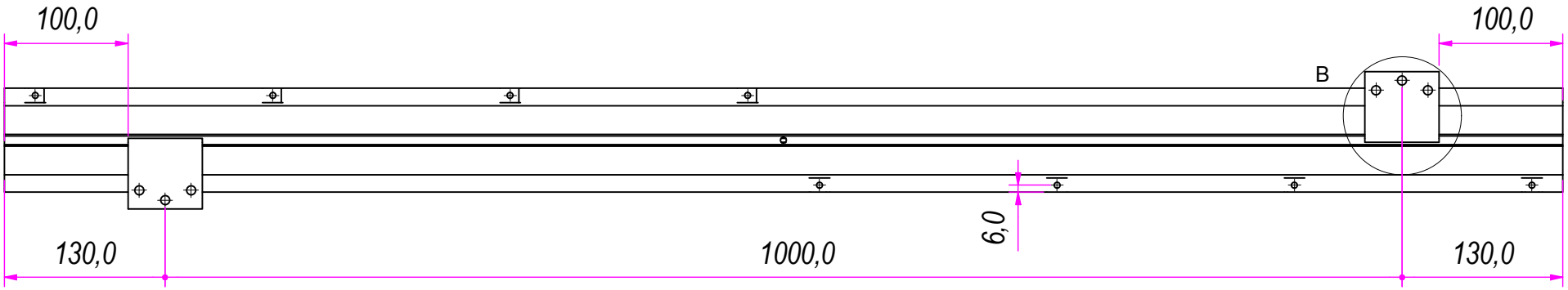

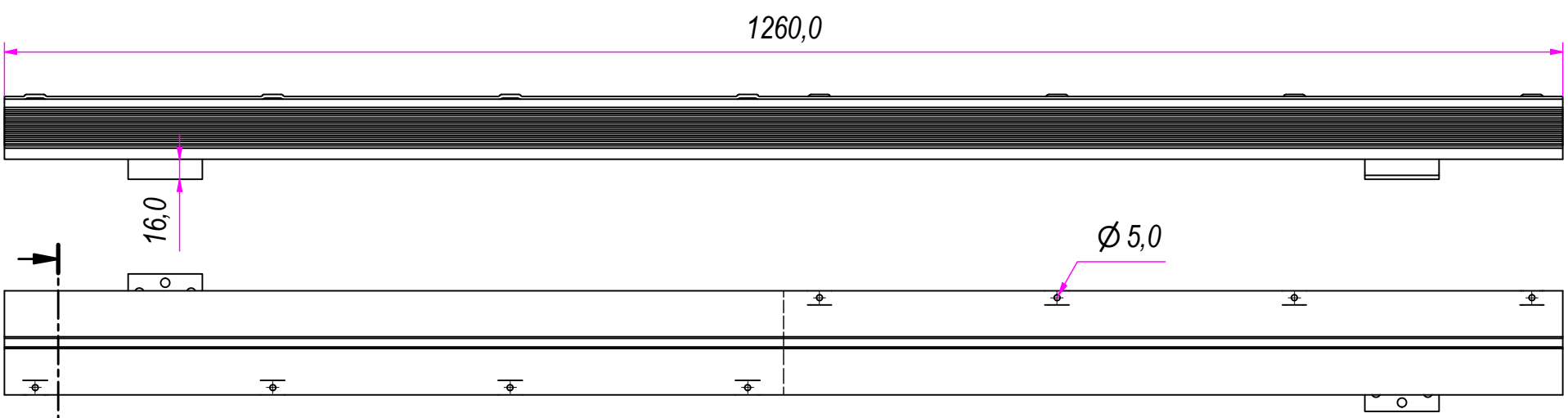

SEZ. A-A

B (1 : 2.5)

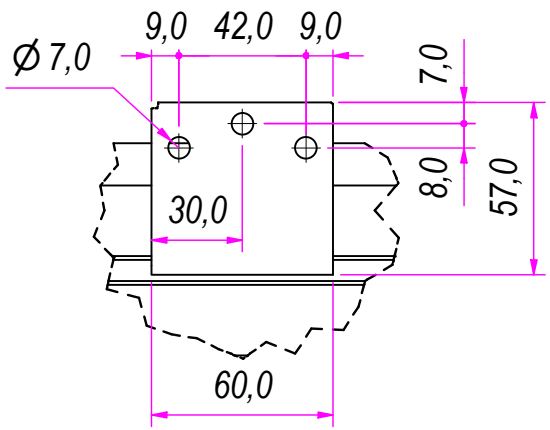

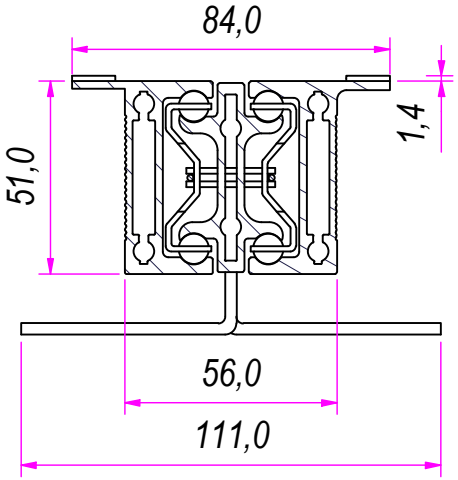

REVISION HISTORY		
REV	DESCRIPTION	DATE
1a		03/10/2018

DESIGNED BY: F.Dino	CHECKED AND APPROVED BY: L. Paleari	GENERAL TOLLERANCE: SS-ISO-2768-1M	DATE: 03/10/2018	CODE: SHT971260
RAM INDUSTRIE		PACKAGING: Carton 1 piece	UNIT: mm	SHEET: 1 of 2
		DESCRIPTION:	MATERIAL: Anodise aluminum alloy 6060	
		DEVICE: Central synchronized movement	PAIR WEIGHT:	02I

Property of RAM Industrie.
Without its written authorization the present drawing shall neither be used for construction anyway, communicated to third parties, nor reproduced.

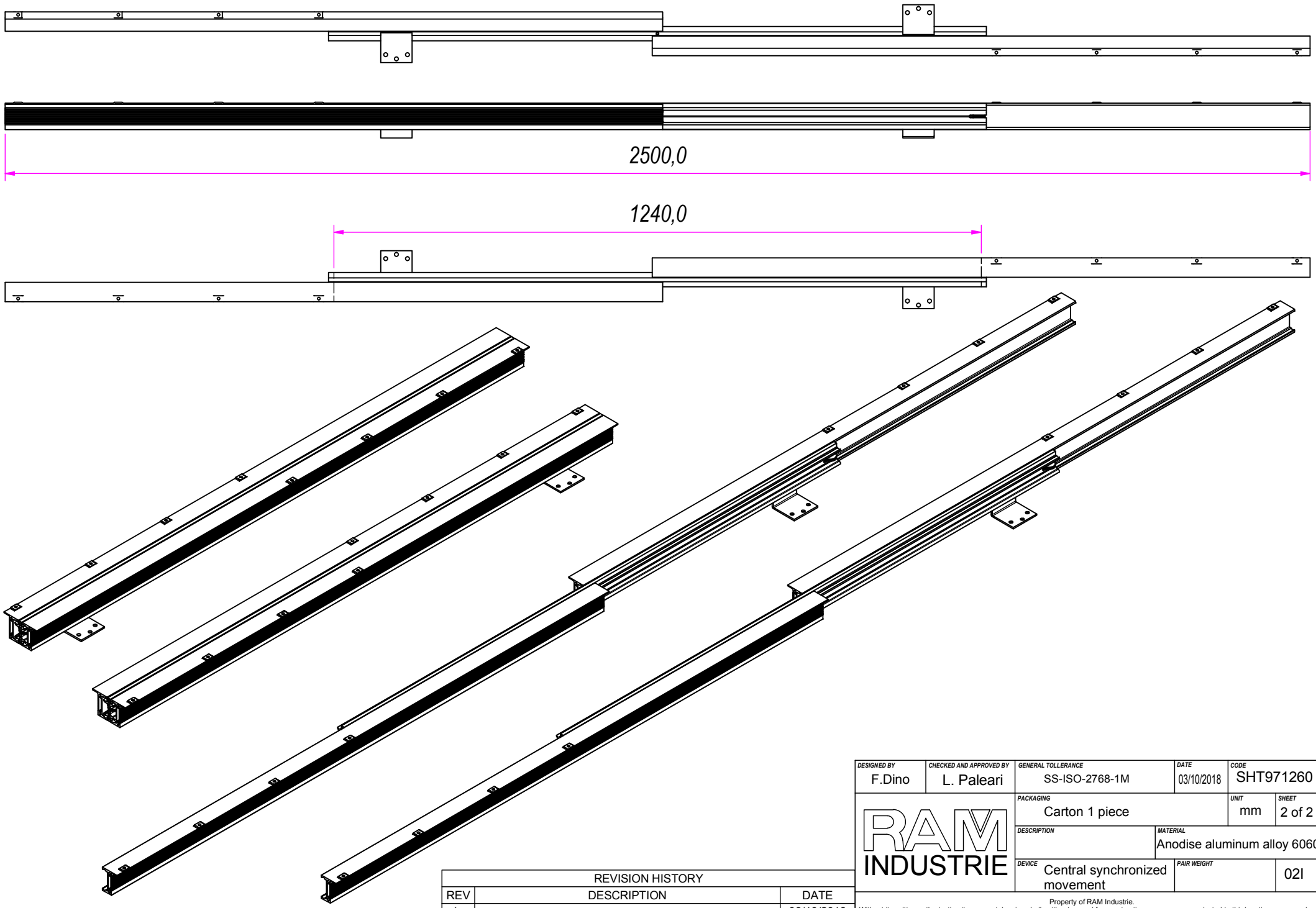

REVISION HISTORY		
REV	DESCRIPTION	DATE
1a		03/10/2018

DESIGNED BY	CHECKED AND APPROVED BY	GENERAL TOLLERANCE	DATE	CODE
F.Dino	L. Paleari	SS-ISO-2768-1M	03/10/2018	SHT971260

RAM INDUSTRIE

PACKAGING	UNIT	SHEET
Carton 1 piece	mm	2 of 2

DESCRIPTION	MATERIAL
	Anodise aluminum alloy 6060

DEVICE	PAIR WEIGHT	
Central synchronized movement		02I

Property of RAM Industrie.
Without its written authorization the present drawing shall neither be used for construction anyway, communicated to third parties, nor reproduced.