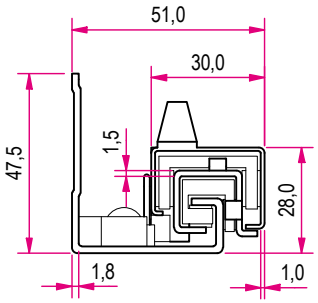
51,0
30,0
47,5
1,5
28,0
1,8
1,0

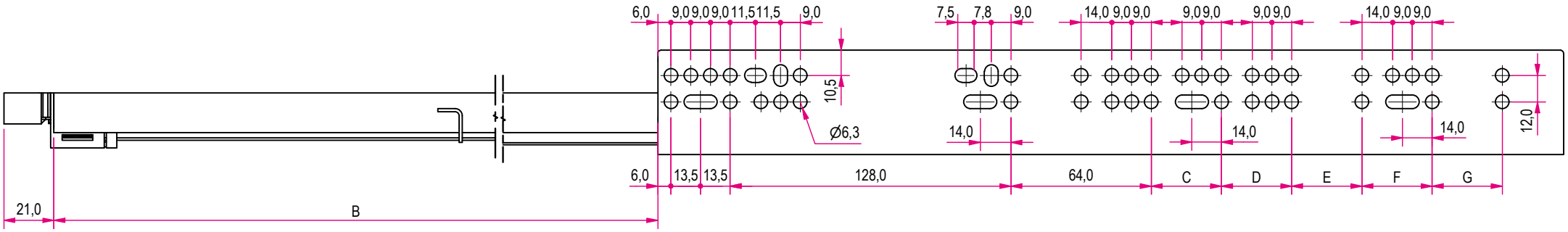
6,0
9,0 9,0 9,0 11,5 11,5
9,0
7,5
7,8
9,0
14,0 9,0 9,0
9,0 9,0
9,0 9,0
14,0 9,0 9,0
10,5
Ø6,3
14,0
14,0
14,0
12,0
6,0
13,5 13,5
128,0
64,0
C
D
E
F
G
21,0
B

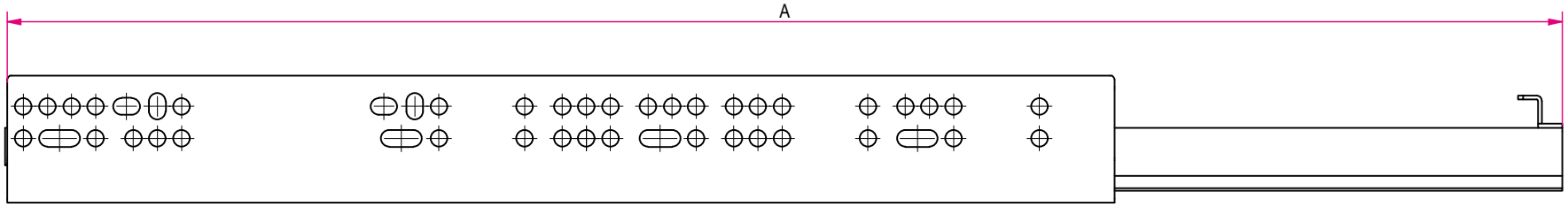
A