UNIVERSITY OF COLOMBO, SRI LANKA

UNIVERSITY OF COLOMBO SCHOOL OF COMPUTING

DEGREE OF BACHELOR OF INFORMATION TECHNOLOGY (EXTERNAL)

Academic Year 2021 – 2nd Year Examination – Semester 3

IT3206 – Data Structures and Algorithms

Part 2 - Structured Question Paper

(ONE HOUR)

To be completed by the candidate

BIT Examination Index No: .....

Important Instructions:

- The duration of the paper is **1 (one) hour**.
- The medium of instruction and questions is English.
- This paper has **2 questions** and **11 pages**.
- **Answer all questions. All questions carry equal Marks**
- **Write your answers** in English using the space provided **in this question paper**.
- Do not tear off any part of this answer book.
- Under no circumstances may this book, used or unused, be removed from the Examination Hall by a candidate.
- Note that questions appear on both sides of the paper.
  If a page is not printed, please inform the supervisor immediately.
- Calculators are **not allowed**.
- *All Rights Reserved.*

Questions Answered

Indicate by a cross (×), (e.g. ☒) the numbers of the questions answered.

	Question numbers		
To be completed by the candidate by marking a cross (×).	1	2	
To be completed by the examiners:			

1) (a) Consider the linked list shown in Figure 1.

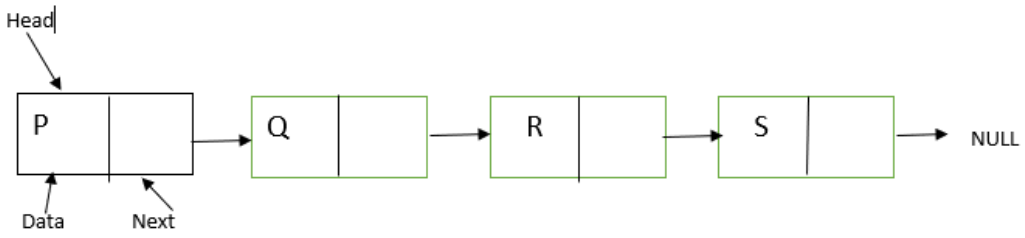

Figure 1

(i) Write pseudocode or Java code to delete the node with data content R from the above list.

Hint: You need to include the following steps in your answer.

- Find the previous node of the node to be deleted.
- Delete the node.
- Release the memory of the deleted node.

(6 Marks)

ANSWER IN THIS BOX

Step 1: Set Ptr=Head
Step 2: Set Preptr=Ptr
Step 3: repeat steps 4 and 5 while ptr->data! =”R”
Step 4: Preprt=ptr
Step 5: ptr=ptr->next
[End of the loop]
Step 6: temp= Ptr
Setp 7: Preptr->next=ptr->next
Step 8: Free temp
Step 9 : exit

(ii) How can you extend the above linked list in (Figure 1) to represent a polynomial expression?

Hint: Polynomials can be represented using the coefficient and exponent.

(6 Marks)

ANSWER IN THIS BOX

The data portion can be defined in two parts in the linked list. One to store the coefficient and another one for the Exponent (Power)

Example 6x3 + 9x2 + 7x + 1

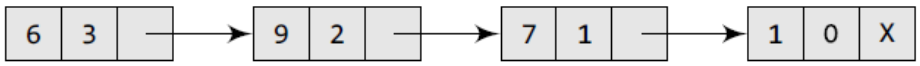

(iii) Using the extended linked list proposed in part a (ii) above, show a linked list representation of the following two (02) polynomials.

Polynomial 1: $6x^4+8x^3+3x+4$
Polynomial 2: $5x^4+2x^3+2x+1$

(6 Marks)

ANSWER IN THIS BOX

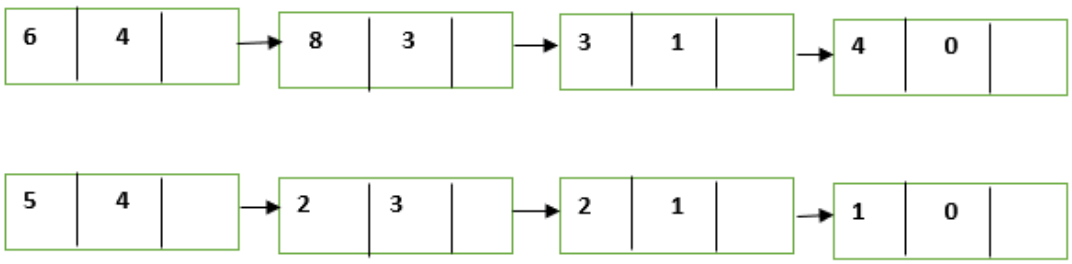

(iv) Write pseudocode or Java code to subtract polynomial-2 from polynomial-1.

(8 Marks)

ANSWER IN THIS BOX

The following pseudocode segment is sufficient for the answer

You may assume initial pointers as Poly1 and Poly2 for polynomial 1 and polynomial 2 respectively.

```
While (poly1->next <> Null and poly2->next<> Null) {
        // If power of 1st polynomial is greater than 2nd,
        // then store 1st as it is and move its pointer
        if (poly1->pow > poly2->pow) {
            poly->pow = poly1->pow;
            poly->coeff = poly1->coeff;
            poly1 = poly1->next.
        }

        // If power of 2nd polynomial is greater than 1st,
        // then store 2nd as it is and move its pointer
        else if (poly1->pow < poly2->pow) {
            poly->pow = poly2->pow;
            poly->coeff = poly2->coeff;
            poly2 = poly2->next;
        }

        // If power of both polynomial numbers is same then
        // add subtract coefficients
        else {
            poly->pow = poly1->pow;
            poly->coeff = poly1->coeff - poly2->coeff;
            poly1 = poly1->next;
            poly2 = poly2->next;
        }
```

(b)(i) Discuss two (02) main differences between static and dynamic data structures.

(6 Marks)

ANSWER IN THIS BOX

Static data structure: the size is allocated at the compile time. Therefore, the maximum size is fixed.

Dynamic data structure: the size is allocated at the run time. Therefore, the maximum size is flexible

(ii) When selecting a suitable data structure for a particular application, the following characteristics are advantageous:

- Efficiency
- Reusability
- Abstraction

Discuss how the above characteristics are advantageous in a client-side implementation.

(6 Marks)

ANSWER IN THIS BOX

- **Efficiency:** It makes the program very efficient in terms of time and space.
- **Reusability:** Provides reusability means that multiple client programs can use the data structure.
- **Abstraction:** this provides the level of abstraction. The client cannot see the internal working of the data structure, so it does not have to worry about the implementation part. The client can only see the interface.

(iii) A circular queue can be implemented for the following scenarios.

- Memory management
- CPU Scheduling:
- Traffic system

Discuss why a circular queue is suitable for implementing the above scenarios than any other data structure.

(6 Marks)

ANSWER IN THIS BOX

- **Memory management:** in case of a circular queue, the memory is managed efficiently by placing the elements in a location which is unused.
- **CPU Scheduling:** The operating system uses the circular queue to insert the processes and then execute them.
- **Traffic system:** . Each light of traffic light gets ON one by one after every interval of time. Like red light gets ON for one minute then yellow light for one minute and then green light. After green light, the red light gets ON.

(iv) Consider the following algorithm, which can be used to insert an element to a circular queue.

```
STEP 1: if (Rear+1) % Max =Front
          Write("Overflow")
          Goto STEP 4
        Endif
STEP 2: if Front=-1 and Rear=-1
           Set Front=Rear=0
        Eles if Rear=Max-1 and Front! = 0
                Set Rear =0
             Else
                Set Rear=(Rear+1) % Max
        Endif
STEP 3: Set Queue (Rear)=Val
STEP 4: Exit
```

Using a suitable diagram, describe how each step of the algorithm works.

(6 Marks)

ANSWER IN THIS BOX

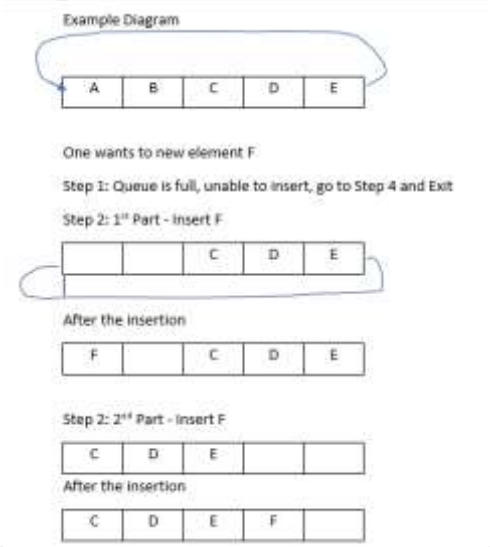

2 (a)(i) Illustrate how merge sort works for the data array below using a diagram.

Data array

30	21	45	2	9	90	13

(8 Marks)

ANSWER IN THIS BOX

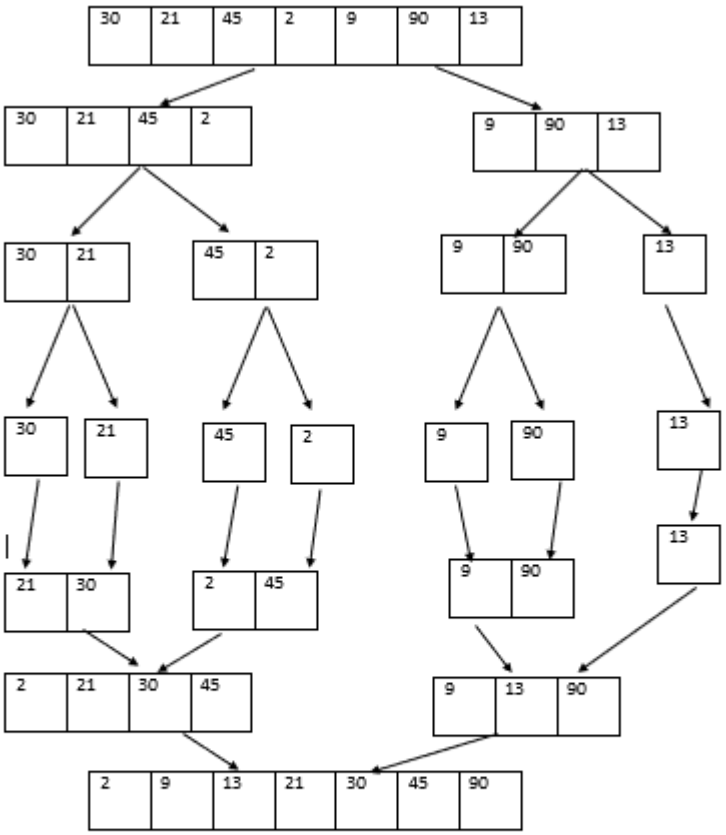

(ii) What is the problem-solving paradigm that merge sort belongs to?

(4 Marks)

ANSWER IN THIS BOX

Divide and conquer technique

(iii) Write pseudocode to explain the main three (3) steps of the merge sort algorithm.

(6 Marks)

ANSWER IN THIS BOX

Step 1 − if it is only a single element in the list, it is already sorted, return it.

Step 2 − divide the list recursively into two halves until it can no more be divided further.

Step 3 − merge the smaller lists into a new list in sorted order (ascending).

(iv) What is the worst-case time complexity of merge sort?

(4 Marks)

ANSWER IN THIS BOX

O(nlog(n))

(b) Consider the following graph representing different cities as labelled nodes and distances between them in miles as labelled edges.

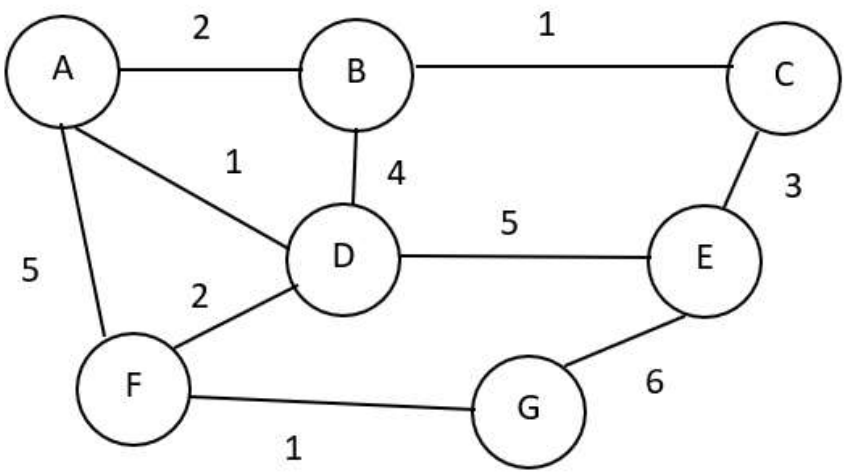

(i) Represent the above graph using an adjacency list representation.

(4 Marks)

ANSWER IN THIS BOX

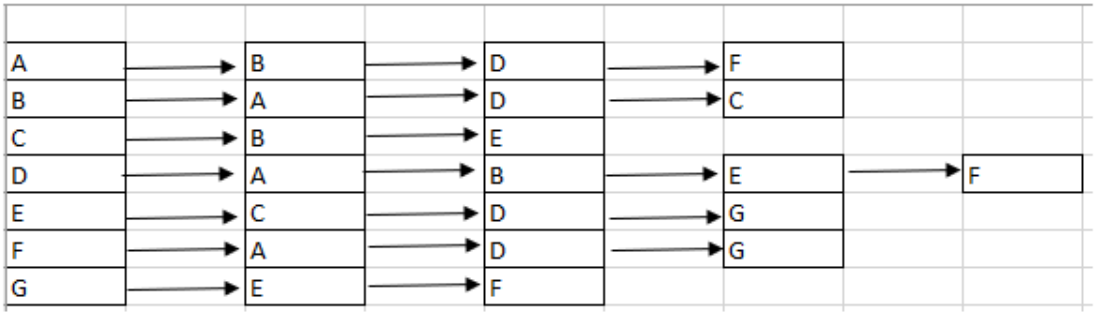

(ii) What is the most appropriate algorithm to find the quickest route to navigate from city A to city G? Use your algorithm to find the quickest route from city A to city G in miles.

(6 Marks)

ANSWER IN THIS BOX

Shortest path algorithm – Dijkstra algorithm

4 miles

(iii) How can you use modified Depth first search algorithm to find the path to traverse from city A to city G?

(8 Marks)

ANSWER IN THIS BOX

1. Call DFS(G, A) with A as the start vertex or our starting city of our graph G.

2. Use a stack S to keep track of the path between the start vertex and the current vertex.

3. As soon as destination vertex z is encountered, return the path as the contents of the stack

(c) Consider the following code segment.

```
                                                    COST
int sum = 0;                                         C1
for(int i = 0; i < n; i++){                          C2
    for(int j = 0; j < n; j++){                      C3
        for(int k = 0; k < n; k *= 2){               C4
            sum += arr[i][j][k];                     C5
        }
    }
}
```

(i) Calculate the code segment's running time considering the given associated costs.

(6 Marks)

ANSWER IN THIS BOX

C1 + (n+1)C2 + n(n+1)C3+ n2(log2n + 1)C4 + n2log2n*C5

(ii) What is the Big-O time complexity for the above code segment in part c (i)?

(4 Marks)

ANSWER IN THIS BOX

$O(n^2 logn)$

****