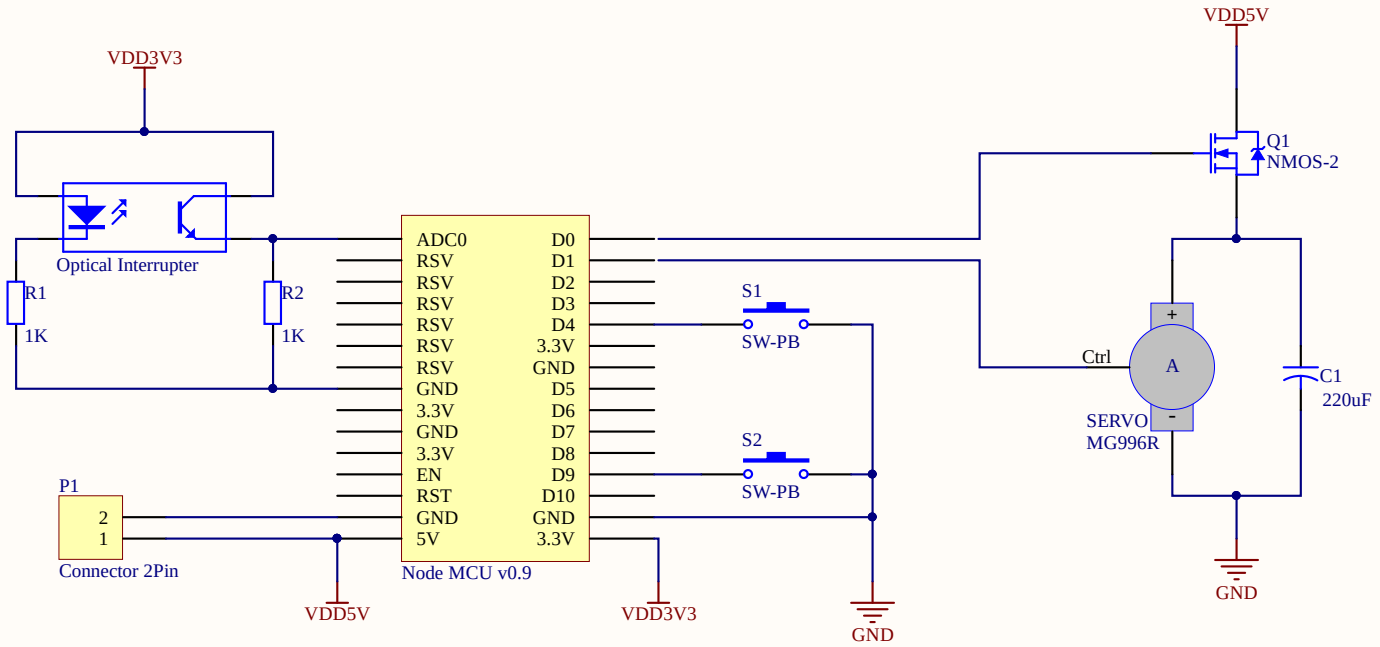

Title	BlindZer_Sche.SchDoc		
Size A	Number 1		Revision -
Date: 2/2/2017		Sheet of 1	
File: F:\Dropbox\..\BlindZer_Sche.SchDoc		Drawn By: Can Chen	