MCU (STM32WB55), SWD Debug & RF (BLE) — BLEC-SCH-0002

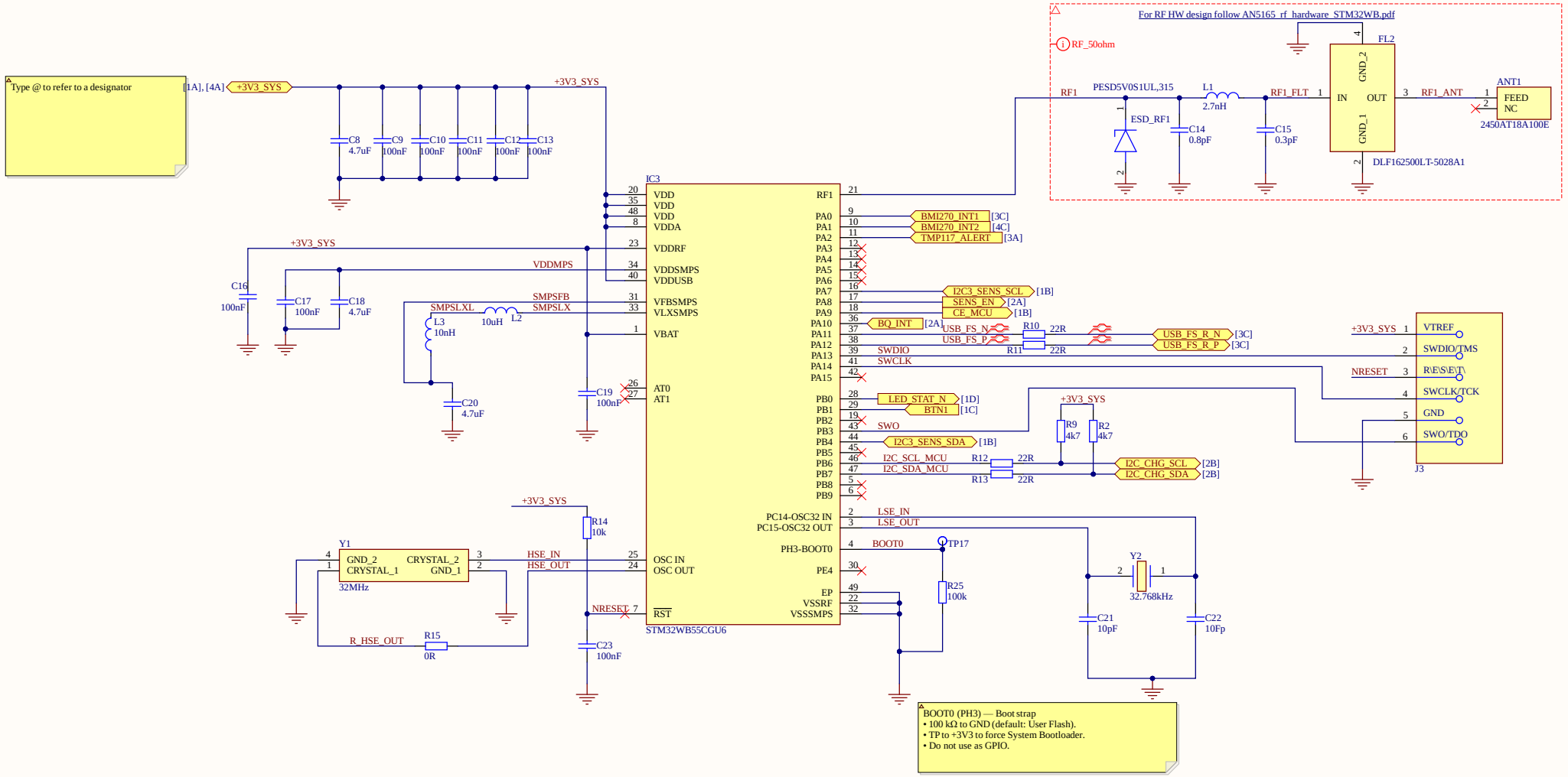

BLE-Control Wearable — Schematic Set (AD25)

BLEC-SCH-0002	A0 (EVT)	
3 of 4	Caoilte Donohoe	

Title		
Size: A3	Number	Revision
Date: 11/17/2025		Sheet of
File: C:\Users\..\MCU_RF.SchDoc		Drawn By:

Sensors/IO: TPS22910A 3V3_SENS, Button, LEDs, I²C — BLEC-SCH-0003

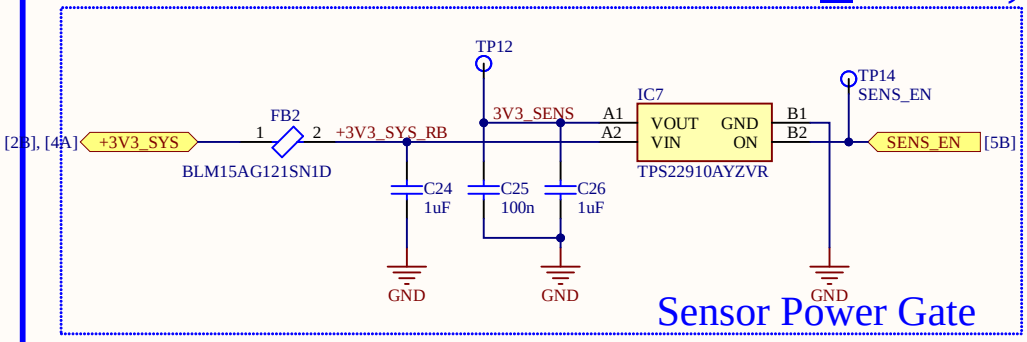

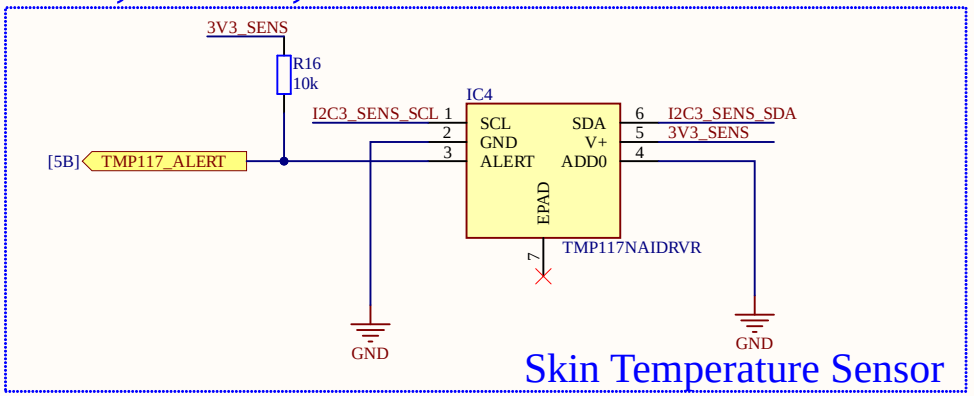

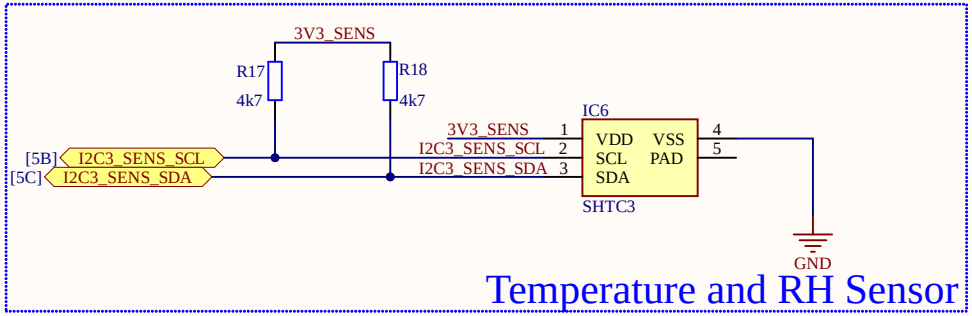

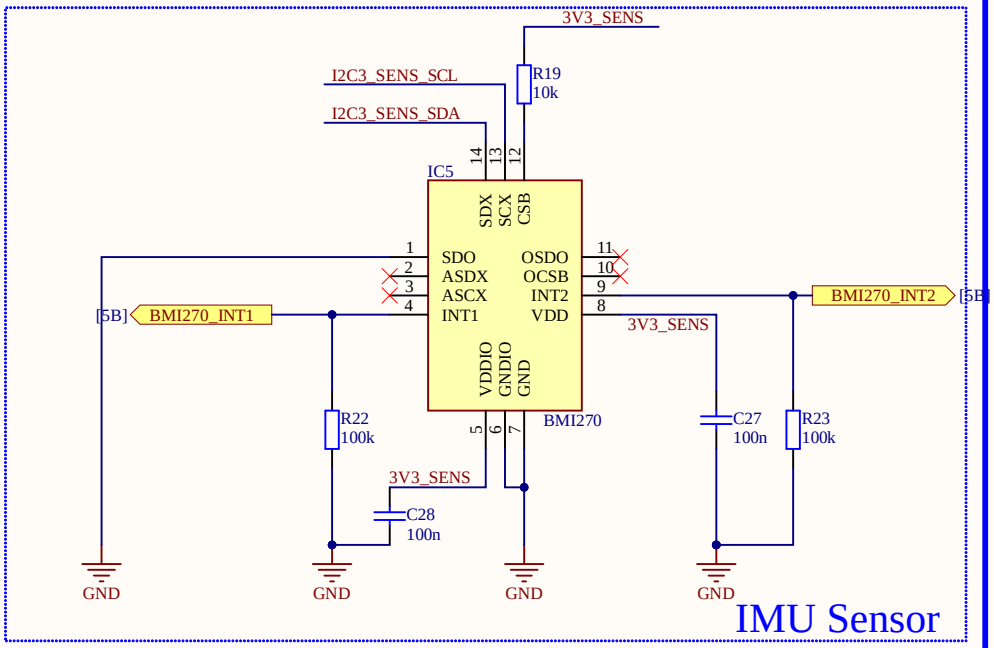

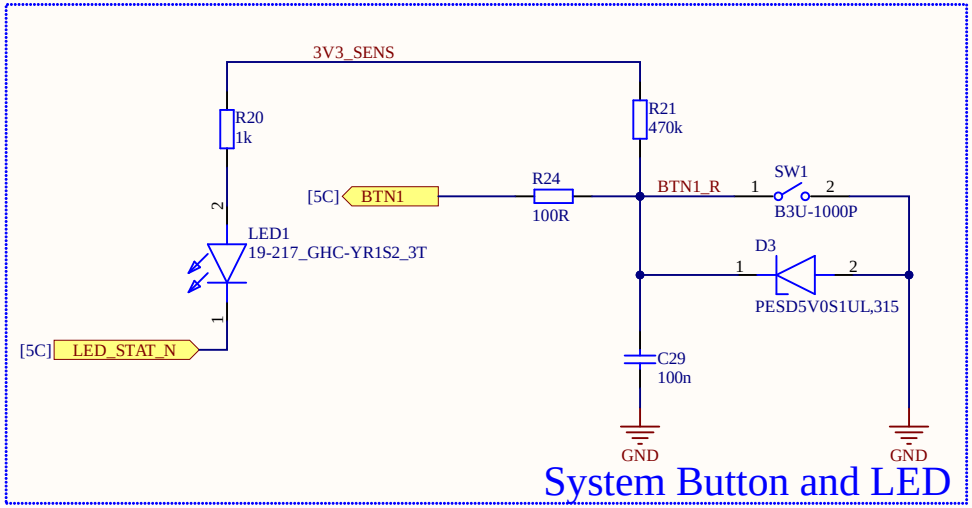

Title: BLE-Control Wearable — Schematic Set (AD25)		
Size: A4	Number: BLEC-SCH-0003	Revision: A0 (EVT)
Date: 11/17/2025	Sheet of: 4 of 4	
File: C:\Users\..\Sensor_IO_Buttons_LED.SchDoc	Drawn By: Caoilte Donohoe	

Power, Battery, USB-C & BQ21061 (Main 3V3) — BLEC-SCH-0001

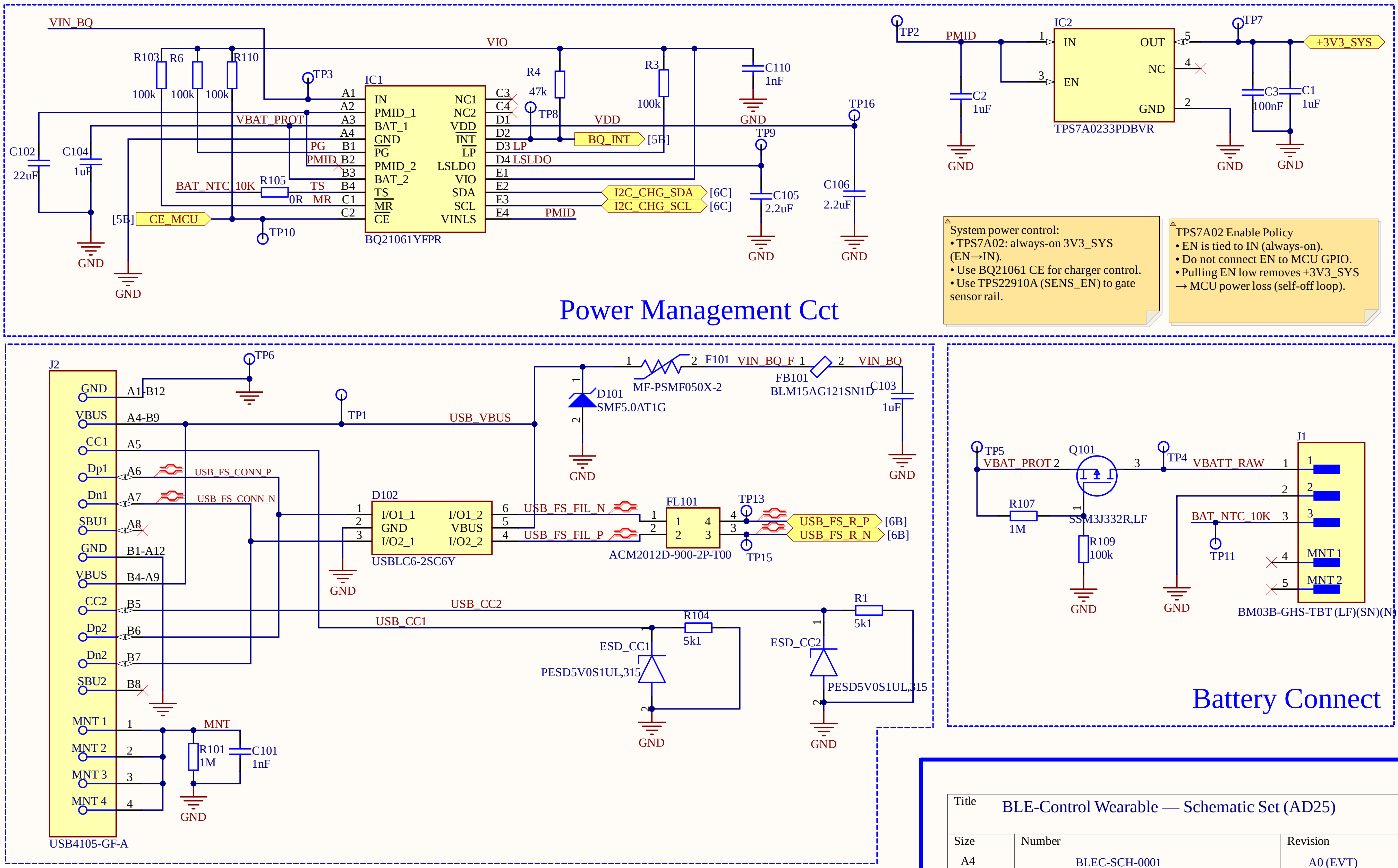

Title	BLE-Control Wearable — Schematic Set (AD25)	
Size: A4	Number: BLEC-SCH-0001	Revision: A0 (EVT)
Date: 11/17/2025		Sheet of: 2 of 4
File: C:\Users\..\Power_Charge_USB.SchDoc		Drawn By: Caoilte Donohoe