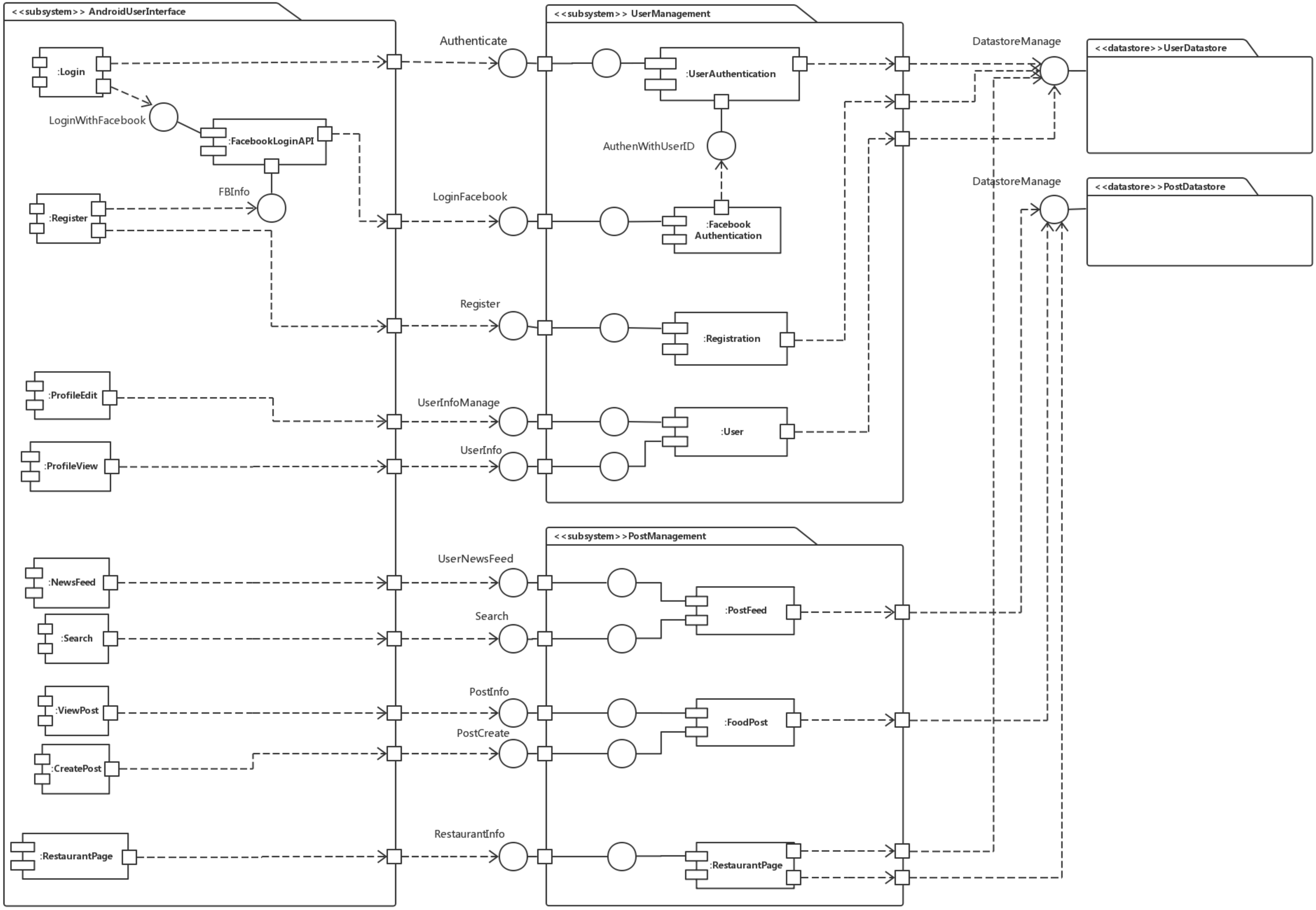
<<subsystem>> AndroidUserInterface
:Login
LoginWithFacebook
:FacebookLoginAPI
FBInfo
:Register
:ProfileEdit
:ProfileView
:NewsFeed
:Search
:ViewPost
:CreatePost
:RestaurantPage
Authenticate
LoginFacebook
Register
UserInfoManage
UserInfo
UserNewsFeed
Search
PostInfo
PostCreate
RestaurantInfo
<<subsystem>> UserManagement
:UserAuthentication
AuthenWithUserID
:Facebook Authentication
:Registration
:User
<<subsystem>> PostManagement
:PostFeed
:FoodPost
:RestaurantPage
DatastoreManage
DatastoreManage
<<datastore>>UserDatastore
<<datastore>>PostDatastore