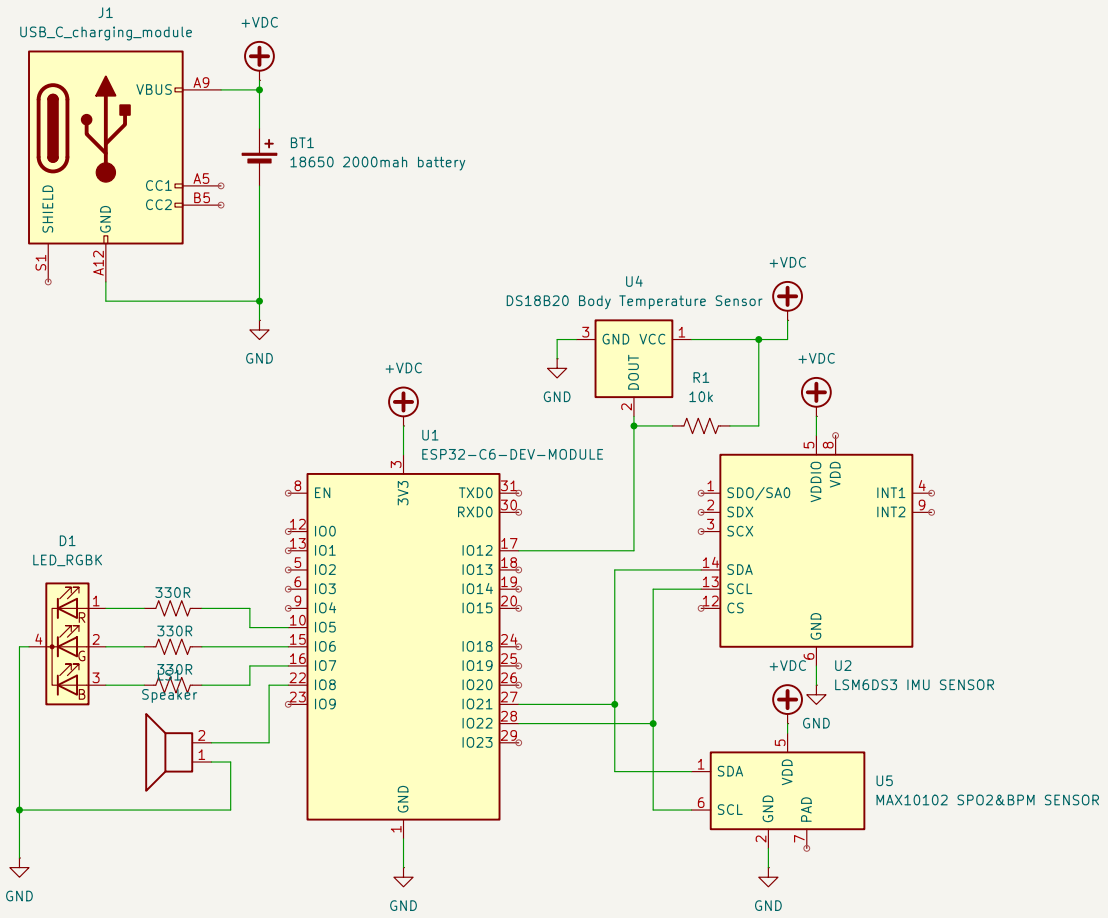

The schematic of the wearble device by Team Vitalink for the Codefest Hackathon 2025

TEAM VITALINK

Sheet: /

File: Vitalink_wearable_schematic.kicad_sch

Title: VITALINK WEARABLE DEVICE SCHEMATIC DESIGN

Size: A4	Date: 2025-10-05	**Rev: first revision**
KiCad E.D.A. 9.0.5		Id: 1/1