Chapter 1

ESP32-S3-DevKitC-1

The ESP32-S3-DevKitC-1 is an entry-level development board equipped with ESP32-S3-WROOM-1, ESP32-S3-WROOM-1U, or ESP32-S3-WROOM-2, a general-purpose Wi-Fi + Bluetooth® Low Energy MCU module that integrates complete Wi-Fi and Bluetooth Low Energy functions.

Most of the I/O pins on the module are broken out to the pin headers on both sides of this board for easy interfacing. Developers can either connect peripherals with jumper wires or mount ESP32-S3-DevKitC-1 on a breadboard.

1.1 ESP32-S3-DevKitC-1 v1.1

The older version: *ESP32-S3-DevKitC-1 v1.0*

This user guide will help you get started with ESP32-S3-DevKitC-1 and will also provide more in-depth information.

The ESP32-S3-DevKitC-1 is an entry-level development board equipped with ESP32-S3-WROOM-1, ESP32-S3-WROOM-1U, or ESP32-S3-WROOM-2, a general-purpose Wi-Fi + Bluetooth® Low Energy MCU module that integrates complete Wi-Fi and Bluetooth Low Energy functions.

Most of the I/O pins on the module are broken out to the pin headers on both sides of this board for easy interfacing. Developers can either connect peripherals with jumper wires or mount ESP32-S3-DevKitC-1 on a breadboard.

Fig. 1: ESP32-S3-DevKitC-1 with ESP32-S3-WROOM-1 Module

The document consists of the following major sections:

- *Getting started*: Overview of the board and hardware/software setup instructions to get started.
- *Hardware Reference*: More detailed information about the board' s hardware.
- *Hardware Revision Details*: Revision history, known issues, and links to user guides for previous versions (if any) of the board.
- *Related Documents*: Links to related documentation.

1.1.1 Getting Started

This section provides a brief introduction of ESP32-S3-DevKitC-1, instructions on how to do the initial hardware setup and how to flash firmware onto it.

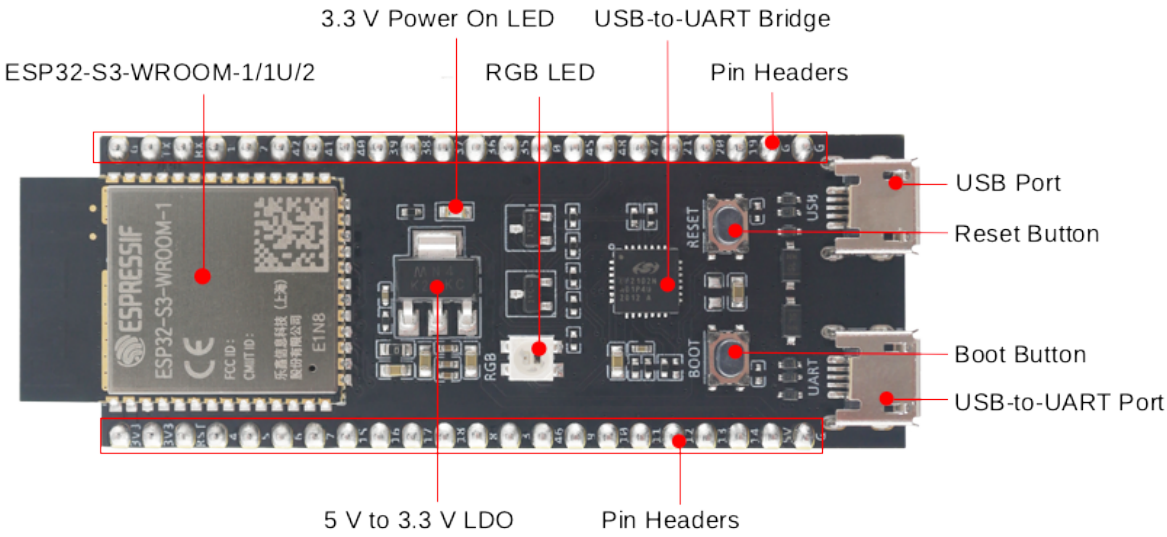

Fig. 2: ESP32-S3-DevKitC-1 - front

Description of Components

The key components of the board are described in a counter-clockwise direction.

Key Component	Description
ESP32-S3-WROOM-1/1U/2	ESP32-S3-WROOM-1, ESP32-S3-WROOM-1U, and ESP32-S3-WROOM-2 are powerful, generic Wi-Fi + Bluetooth Low Energy MCU modules that have a rich set of peripherals. They provide acceleration for neural network computing and signal processing workloads. ESP32-S3-WROOM-1 and ESP32-S3-WROOM-2 comes with a PCB antenna. ESP32-S3-WROOM-1U comes with an external antenna connector.
5 V to 3.3 V LDO	Power regulator that converts a 5 V supply into a 3.3 V output.
Pin Headers	All available GPIO pins (except for the SPI bus for flash) are broken out to the pin headers on the board for easy interfacing and programming. For details, please see *Header Block*.
USB-to-UART Port	A Micro-USB port used for power supply to the board, for flashing applications to the chip, as well as for communication with the chip via the on-board USB-to-UART bridge.
Boot Button	Download button. Holding down **Boot** and then pressing **Reset** initiates Firmware Download mode for downloading firmware through the serial port.
Reset Button	Press this button to restart the system.
USB Port	ESP32-S3 full-speed USB OTG interface, compliant with the USB 1.1 specification. The interface is used for power supply to the board, for flashing applications to the chip, for communication with the chip using USB 1.1 protocols, as well as for JTAG debugging.
USB-to-UART Bridge	Single USB-to-UART bridge chip provides transfer rates up to 3 Mbps.
RGB LED	Addressable RGB LED, driven by GPIO38.
3.3 V Power On LED	Turns on when the USB power is connected to the board.

Note: For boards with Octal SPI flash/PSRAM memory embedded ESP32-S3-WROOM-1/1U modules, and boards with ESP32-S3-WROOM-2 modules, the pins GPIO35, GPIO36 and GPIO37 are used for the internal communi-

cation between ESP32-S3 and SPI flash/PSRAM memory, thus not available for external use.

Start Application Development

Before powering up your board, please make sure that it is in good condition with no obvious signs of damage.

Required Hardware

- ESP32-S3-DevKitC-1
- USB 2.0 cable (Standard-A to Micro-B)
- Computer running Windows, Linux, or macOS

Note: Be sure to use an appropriate USB cable. Some cables are for charging only and do not provide the needed data lines nor work for programming the boards.

Hardware Setup Connect the board with the computer using **USB-to-UART Port** or **ESP32-S3 USB Port**. In subsequent steps, **USB-to-UART Port** will be used by default.

Software Setup Please proceed to Get Started, where Section Installation will quickly help you set up the development environment and then flash an application example onto your board.

Contents and Packaging

Ordering Information The development board has a variety of variants to choose from, as shown in the table below.

Ordering Code	Module Integrated	Flash	PSRAM	SPI Voltage
ESP32-S3-DevKitC-1-N8R8	ESP32-S3-WROOM-1-N8R8	8 MB QD	8 MB OT	3.3 V
ESP32-S3-DevKitC-1-N32R16V	ESP32-S3-WROOM-2-N32R16V	32 MB OT	16 MB OT	1.8 V
ESP32-S3-DevKitC-1U-N8R8	ESP32-S3-WROOM-1U-N8R8	8 MB QD	8 MB OT	3.3 V

Note: In the table above, QD stands for Quad SPI and OT stands for Octal SPI.

Retail Orders If you order a few samples, each board comes in an individual package in either antistatic bag or any packaging depending on your retailer.

For retail orders, please go to https://www.espressif.com/en/contact-us/get-samples.

Wholesale Orders If you order in bulk, the boards come in large cardboard boxes.

For wholesale orders, please go to https://www.espressif.com/en/contact-us/sales-questions.

1.1.2 Hardware Reference

Block Diagram

The block diagram below shows the components of ESP32-S3-DevKitC-1 and their interconnections.

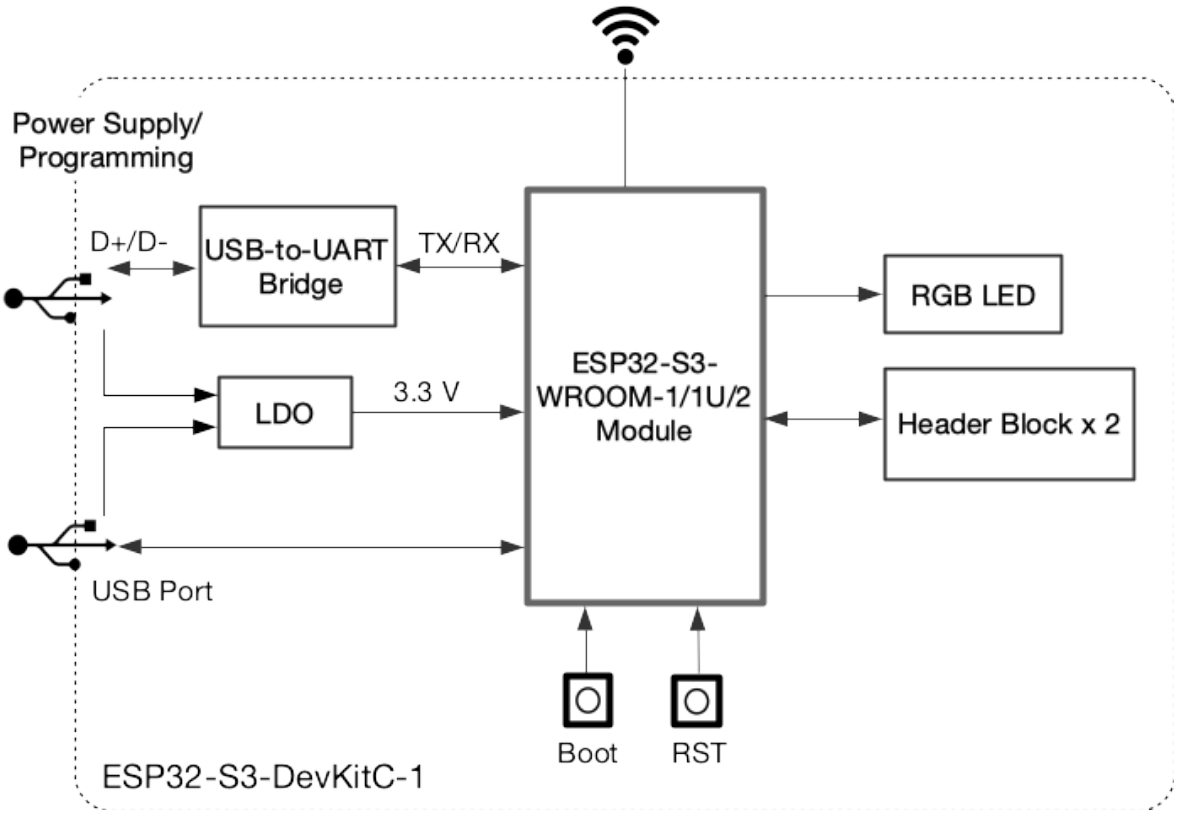

Fig. 3: ESP32-S3-DevKitC-1 (click to enlarge)

Power Supply Options There are three mutually exclusive ways to provide power to the board:

- USB-to-UART Port and ESP32-S3 USB Port (either one or both), default power supply (recommended)
- 5V and G (GND) pins
- 3V3 and G (GND) pins

Header Block

The two tables below provide the **Name** and **Function** of the pins on both sides of the board (J1 and J3). The pin names are shown in *ESP32-S3-DevKitC-1 - front*. The numbering is the same as in the Board Schematic (PDF).

J1

No.	Name	Type[Page 7, 1]	Function
1	3V3	P	3.3 V power supply
2	3V3	P	3.3 V power supply
3	RST	I	EN
4	4	I/O/T	RTC_GPIO4, GPIO4, TOUCH4, ADC1_CH3
5	5	I/O/T	RTC_GPIO5, GPIO5, TOUCH5, ADC1_CH4
6	6	I/O/T	RTC_GPIO6, GPIO6, TOUCH6, ADC1_CH5
7	7	I/O/T	RTC_GPIO7, GPIO7, TOUCH7, ADC1_CH6
8	15	I/O/T	RTC_GPIO15, GPIO15, U0RTS, ADC2_CH4, XTAL_32K_P
9	16	I/O/T	RTC_GPIO16, GPIO16, U0CTS, ADC2_CH5, XTAL_32K_N
10	17	I/O/T	RTC_GPIO17, GPIO17, U1TXD, ADC2_CH6
11	18	I/O/T	RTC_GPIO18, GPIO18, U1RXD, ADC2_CH7, CLK_OUT3
12	8	I/O/T	RTC_GPIO8, GPIO8, TOUCH8, ADC1_CH7, SUBSPICS1
13	3	I/O/T	RTC_GPIO3, GPIO3, TOUCH3, ADC1_CH2
14	46	I/O/T	GPIO46
15	9	I/O/T	RTC_GPIO9, GPIO9, TOUCH9, ADC1_CH8, FSPIHD, SUBSPIHD
16	10	I/O/T	RTC_GPIO10, GPIO10, TOUCH10, ADC1_CH9, FSPICS0, FSPIIO4, SUBSPICS0
17	11	I/O/T	RTC_GPIO11, GPIO11, TOUCH11, ADC2_CH0, FSPID, FSPIIO5, SUBSPID
18	12	I/O/T	RTC_GPIO12, GPIO12, TOUCH12, ADC2_CH1, FSPICLK, FSPIIO6, SUBSPICLK
19	13	I/O/T	RTC_GPIO13, GPIO13, TOUCH13, ADC2_CH2, FSPIQ, FSPIIO7, SUBSPIQ
20	14	I/O/T	RTC_GPIO14, GPIO14, TOUCH14, ADC2_CH3, FSPIWP, FSPIDQS, SUBSPIWP
21	5V	P	5 V power supply
22	G	G	Ground

J3

No.	Name	Type	Function
1	G	G	Ground
2	TX	I/O/T	U0TXD, GPIO43, CLK_OUT1
3	RX	I/O/T	U0RXD, GPIO44, CLK_OUT2
4	1	I/O/T	RTC_GPIO1, GPIO1, TOUCH1, ADC1_CH0
5	2	I/O/T	RTC_GPIO2, GPIO2, TOUCH2, ADC1_CH1
6	42	I/O/T	MTMS, GPIO42
7	41	I/O/T	MTDI, GPIO41, CLK_OUT1
8	40	I/O/T	MTDO, GPIO40, CLK_OUT2
9	39	I/O/T	MTCK, GPIO39, CLK_OUT3, SUBSPICS1
10	38	I/O/T	GPIO38, FSPIWP, SUBSPIWP, RGB LED
11	37	I/O/T	SPIDQS, GPIO37, FSPIQ, SUBSPIQ
12	36	I/O/T	SPIIO7, GPIO36, FSPICLK, SUBSPICLK
13	35	I/O/T	SPIIO6, GPIO35, FSPID, SUBSPID
14	0	I/O/T	RTC_GPIO0, GPIO0
15	45	I/O/T	GPIO45
16	48	I/O/T	GPIO48, SPICLK_N, SUBSPICLK_N_DIFF
17	47	I/O/T	GPIO47, SPICLK_P, SUBSPICLK_P_DIFF
18	21	I/O/T	RTC_GPIO21, GPIO21
19	20	I/O/T	RTC_GPIO20, GPIO20, U1CTS, ADC2_CH9, CLK_OUT1, USB_D+
20	19	I/O/T	RTC_GPIO19, GPIO19, U1RTS, ADC2_CH8, CLK_OUT2, USB_D-
21	G	G	Ground
22	G	G	Ground

[1] P: Power supply; I: Input; O: Output; T: High impedance.

For description of function names, please refer to ESP32-S3 Series Datasheet (PDF).

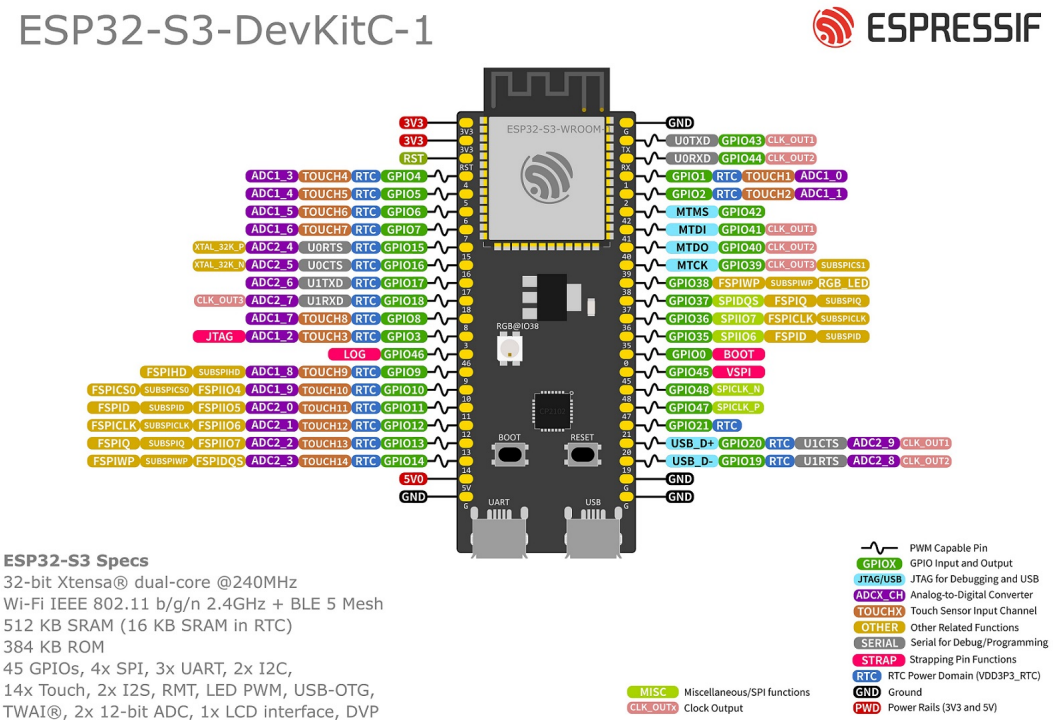

Fig. 4: ESP32-S3-DevKitC-1 Pin Layout (click to enlarge)

Pin Layout

1.1.3 Hardware Revision Details

Initial release

Note: Both the initial and v1.1 versions of ESP32-S3-DevKitC-1 are available on the market. The main difference lies in the GPIO assignment for the RGB LED: the initial version uses GPIO48, whereas v1.1 uses GPIO38.

1.1.4 Related Documents

- ESP32-S3 Datasheet (PDF)
- ESP32-S3-WROOM-1 & ESP32-S3-WROOM-1U Datasheet (PDF)
- ESP32-S3-WROOM-2 Datasheet (PDF)
- ESP32-S3-DevKitC-1 Schematic (PDF)
- ESP32-S3-DevKitC-1 PCB layout (PDF)
- ESP32-S3-DevKitC-1 Dimensions (PDF)
- ESP32-S3-DevKitC-1 Dimensions source file (DXF) - You can view it with Autodesk Viewer online

For further design documentation for the board, please contact us at sales@espressif.com.

ESP32-S3-DevKitC-1 v1.0

The latest version: *ESP32-S3-DevKitC-1 v1.1*

This user guide will help you get started with ESP32-S3-DevKitC-1 and will also provide more in-depth information.

The ESP32-S3-DevKitC-1 is an entry-level development board equipped with ESP32-S3-WROOM-1, ESP32-S3-WROOM-1U, or ESP32-S3-WROOM-2, a general-purpose Wi-Fi + Bluetooth® Low Energy MCU module that integrates complete Wi-Fi and Bluetooth Low Energy functions.

Most of the I/O pins on the module are broken out to the pin headers on both sides of this board for easy interfacing. Developers can either connect peripherals with jumper wires or mount ESP32-S3-DevKitC-1 on a breadboard.

Fig. 5: ESP32-S3-DevKitC-1 with ESP32-S3-WROOM-1 Module

The document consists of the following major sections:

- *Getting started*: Overview of the board and hardware/software setup instructions to get started.
- *Hardware Reference*: More detailed information about the board' s hardware.
- *Hardware Revision Details*: Revision history, known issues, and links to user guides for previous versions (if any) of the board.
- *Related Documents*: Links to related documentation.

Getting Started This section provides a brief introduction of ESP32-S3-DevKitC-1, instructions on how to do the initial hardware setup and how to flash firmware onto it.

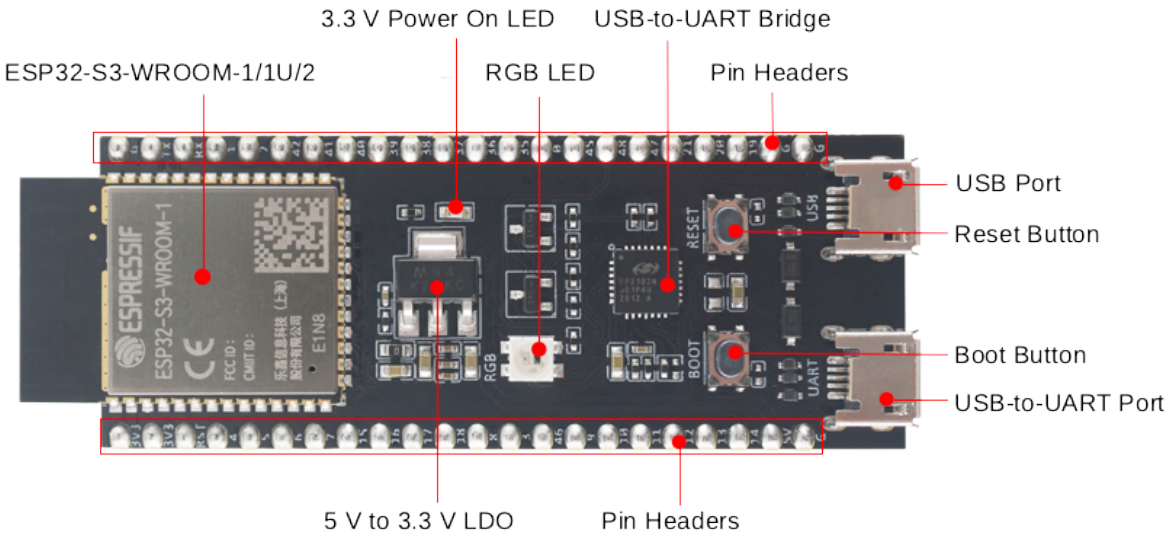

Fig. 6: ESP32-S3-DevKitC-1 - front

Description of Components The key components of the board are described in a counter-clockwise direction.

Key Component	Description
ESP32-S3-WROOM-1/1U/2	ESP32-S3-WROOM-1, ESP32-S3-WROOM-1U, and ESP32-S3-WROOM-2 are powerful, generic Wi-Fi + Bluetooth Low Energy MCU modules that have a rich set of peripherals. They provide acceleration for neural network computing and signal processing workloads. ESP32-S3-WROOM-1 and ESP32-S3-WROOM-2 comes with a PCB antenna. ESP32-S3-WROOM-1U comes with an external antenna connector.
5 V to 3.3 V LDO	Power regulator that converts a 5 V supply into a 3.3 V output.
Pin Headers	All available GPIO pins (except for the SPI bus for flash) are broken out to the pin headers on the board for easy interfacing and programming. For details, please see *Header Block*.
USB-to-UART Port	A Micro-USB port used for power supply to the board, for flashing applications to the chip, as well as for communication with the chip via the on-board USB-to-UART bridge.
Boot Button	Download button. Holding down **Boot** and then pressing **Reset** initiates Firmware Download mode for downloading firmware through the serial port.
Reset Button	Press this button to restart the system.
ESP32-S3 USB Port	ESP32-S3 full-speed USB OTG interface, compliant with the USB 1.1 specification. The interface is used for power supply to the board, for flashing applications to the chip, for communication with the chip using USB 1.1 protocols, as well as for JTAG debugging.
USB-to-UART Bridge	Single USB-to-UART bridge chip provides transfer rates up to 3 Mbps.
RGB LED	Addressable RGB LED, driven by GPIO48.
3.3 V Power On LED	Turns on when the USB power is connected to the board.

Note: For boards with Octal SPI flash/PSRAM memory embedded ESP32-S3-WROOM-1/1U modules, and boards with ESP32-S3-WROOM-2 modules, the pins GPIO35, GPIO36 and GPIO37 are used for the internal communication between ESP32-S3 and SPI flash/PSRAM memory, thus not available for external use.

Start Application Development Before powering up your board, please make sure that it is in good condition with no obvious signs of damage.

Required Hardware

- ESP32-S3-DevKitC-1
- USB 2.0 cable (Standard-A to Micro-B)
- Computer running Windows, Linux, or macOS

Note: Be sure to use an appropriate USB cable. Some cables are for charging only and do not provide the needed data lines nor work for programming the boards.

Hardware Setup Connect the board with the computer using **USB-to-UART Port**. Connection using **ESP32-S3 USB Port** is not fully implemented in software. In subsequent steps, **USB-to-UART Port** will be used by default.

Software Setup Please proceed to Get Started, where Section Installation will quickly help you set up the development environment and then flash an application example onto your board.

Contents and Packaging

Ordering Information The development board has a variety of variants to choose from, as shown in the table below.

Ordering Code	Module Integrated	Flash	PSRAM	SPI Voltage
ESP32-S3-DevKitC-1-N8R8	ESP32-S3-WROOM-1-N8R8	8 MB QD	8 MB OT	3.3 V
ESP32-S3-DevKitC-1-N32R16V	ESP32-S3-WROOM-2-N32R16V	32 MB OT	16 MB OT	1.8 V
ESP32-S3-DevKitC-1U-N8R8	ESP32-S3-WROOM-1U-N8R8	8 MB QD	8 MB OT	3.3 V

Note: In the table above, QD stands for Quad SPI and OT stands for Octal SPI.

Retail Orders If you order a few samples, each board comes in an individual package in either antistatic bag or any packaging depending on your retailer.

For retail orders, please go to https://www.espressif.com/en/company/contact/buy-a-sample.

Wholesale Orders If you order in bulk, the boards come in large cardboard boxes.

For wholesale orders, please go to https://www.espressif.com/en/contact-us/sales-questions.

Hardware Reference

Block Diagram The block diagram below shows the components of ESP32-S3-DevKitC-1 and their interconnections.

Power Supply Options There are three mutually exclusive ways to provide power to the board:

- USB-to-UART Port and ESP32-S3 USB Port (either one or both), default power supply (recommended)
- 5V and G (GND) pins
- 3V3 and G (GND) pins

Header Block The two tables below provide the **Name** and **Function** of the pins on both sides of the board (J1 and J3). The pin names are shown in *ESP32-S3-DevKitC-1 - front*. The numbering is the same as in the Board Schematic (PDF).

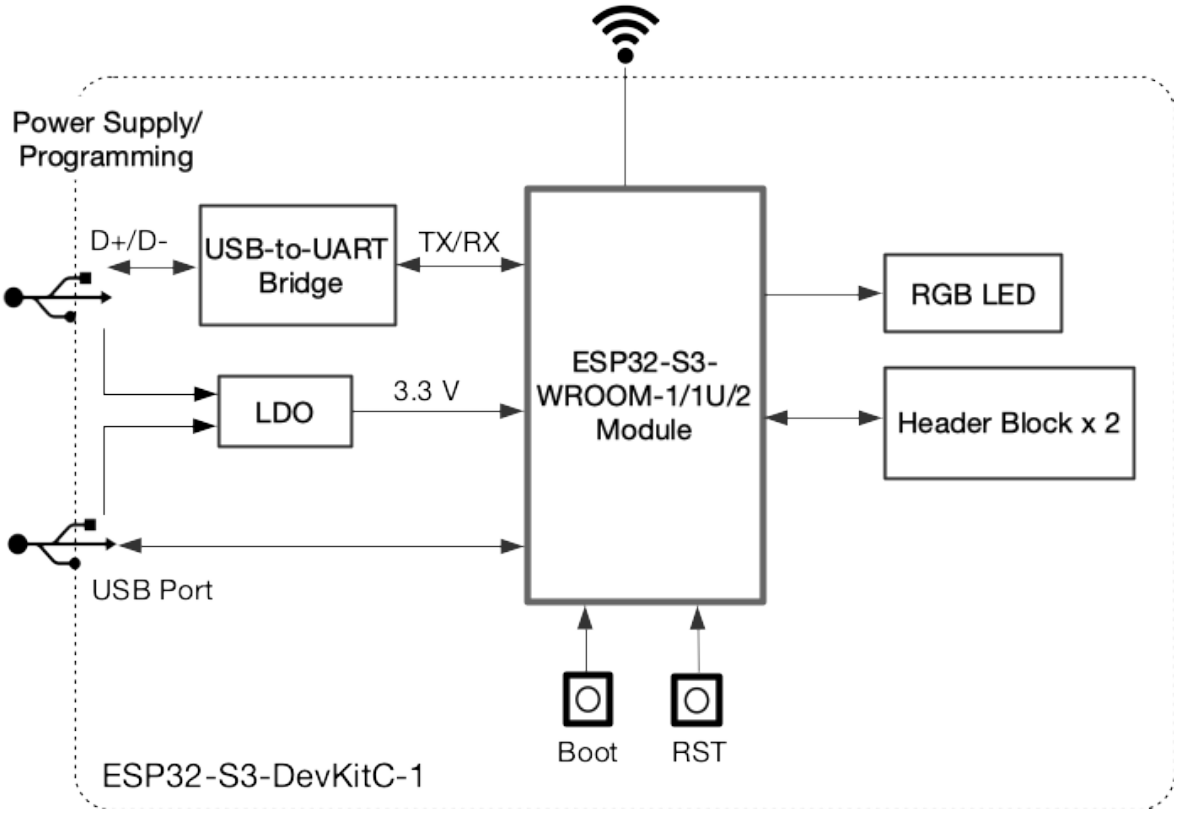

Fig. 7: ESP32-S3-DevKitC-1 (click to enlarge)

J1

No.	Name	Type[Page 13, 1]	Function
1	3V3	P	3.3 V power supply
2	3V3	P	3.3 V power supply
3	RST	I	EN
4	4	I/O/T	RTC_GPIO4, GPIO4, TOUCH4, ADC1_CH3
5	5	I/O/T	RTC_GPIO5, GPIO5, TOUCH5, ADC1_CH4
6	6	I/O/T	RTC_GPIO6, GPIO6, TOUCH6, ADC1_CH5
7	7	I/O/T	RTC_GPIO7, GPIO7, TOUCH7, ADC1_CH6
8	15	I/O/T	RTC_GPIO15, GPIO15, U0RTS, ADC2_CH4, XTAL_32K_P
9	16	I/O/T	RTC_GPIO16, GPIO16, U0CTS, ADC2_CH5, XTAL_32K_N
10	17	I/O/T	RTC_GPIO17, GPIO17, U1TXD, ADC2_CH6
11	18	I/O/T	RTC_GPIO18, GPIO18, U1RXD, ADC2_CH7, CLK_OUT3
12	8	I/O/T	RTC_GPIO8, GPIO8, TOUCH8, ADC1_CH7, SUBSPICS1
13	3	I/O/T	RTC_GPIO3, GPIO3, TOUCH3, ADC1_CH2
14	46	I/O/T	GPIO46
15	9	I/O/T	RTC_GPIO9, GPIO9, TOUCH9, ADC1_CH8, FSPIHD, SUBSPIHD
16	10	I/O/T	RTC_GPIO10, GPIO10, TOUCH10, ADC1_CH9, FSPICS0, FSPIIO4, SUBSPICS0
17	11	I/O/T	RTC_GPIO11, GPIO11, TOUCH11, ADC2_CH0, FSPID, FSPIIO5, SUBSPID
18	12	I/O/T	RTC_GPIO12, GPIO12, TOUCH12, ADC2_CH1, FSPICLK, FSPIIO6, SUBSPICLK
19	13	I/O/T	RTC_GPIO13, GPIO13, TOUCH13, ADC2_CH2, FSPIQ, FSPIIO7, SUBSPIQ
20	14	I/O/T	RTC_GPIO14, GPIO14, TOUCH14, ADC2_CH3, FSPIWP, FSPIDQS, SUBSPIWP
21	5V	P	5 V power supply
22	G	G	Ground

J3

No.	Name	Type	Function
1	G	G	Ground
2	TX	I/O/T	U0TXD, GPIO43, CLK_OUT1
3	RX	I/O/T	U0RXD, GPIO44, CLK_OUT2
4	1	I/O/T	RTC_GPIO1, GPIO1, TOUCH1, ADC1_CH0
5	2	I/O/T	RTC_GPIO2, GPIO2, TOUCH2, ADC1_CH1
6	42	I/O/T	MTMS, GPIO42
7	41	I/O/T	MTDI, GPIO41, CLK_OUT1
8	40	I/O/T	MTDO, GPIO40, CLK_OUT2
9	39	I/O/T	MTCK, GPIO39, CLK_OUT3, SUBSPICS1
10	38	I/O/T	GPIO38, FSPIWP, SUBSPIWP
11	37	I/O/T	SPIDQS, GPIO37, FSPIQ, SUBSPIQ
12	36	I/O/T	SPIIO7, GPIO36, FSPICLK, SUBSPICLK
13	35	I/O/T	SPIIO6, GPIO35, FSPID, SUBSPID
14	0	I/O/T	RTC_GPIO0, GPIO0
15	45	I/O/T	GPIO45
16	48	I/O/T	GPIO48, SPICLK_N, SUBSPICLK_N_DIFF, RGB LED
17	47	I/O/T	GPIO47, SPICLK_P, SUBSPICLK_P_DIFF
18	21	I/O/T	RTC_GPIO21, GPIO21
19	20	I/O/T	RTC_GPIO20, GPIO20, U1CTS, ADC2_CH9, CLK_OUT1, USB_D+
20	19	I/O/T	RTC_GPIO19, GPIO19, U1RTS, ADC2_CH8, CLK_OUT2, USB_D-
21	G	G	Ground
22	G	G	Ground

For description of function names, please refer to Chip Datasheet (PDF).

Pin Layout

Hardware Revision Details This is the first revision of this board released.

Related Documents

- ESP32-S3 Datasheet (PDF)
- ESP32-S3-WROOM-1 & ESP32-S3-WROOM-1U Datasheet (PDF)
- ESP32-S3-WROOM-2 Datasheet (PDF)
- ESP32-S3-DevKitC-1 Schematic (PDF)
- ESP32-S3-DevKitC-1 PCB layout (PDF)
- ESP32-S3-DevKitC-1 Dimensions (PDF)
- ESP32-S3-DevKitC-1 Dimensions source file (DXF) - You can view it with Autodesk Viewer online

For further design documentation for the board, please contact us at sales@espressif.com.

[1] P: Power supply; I: Input; O: Output; T: High impedance.

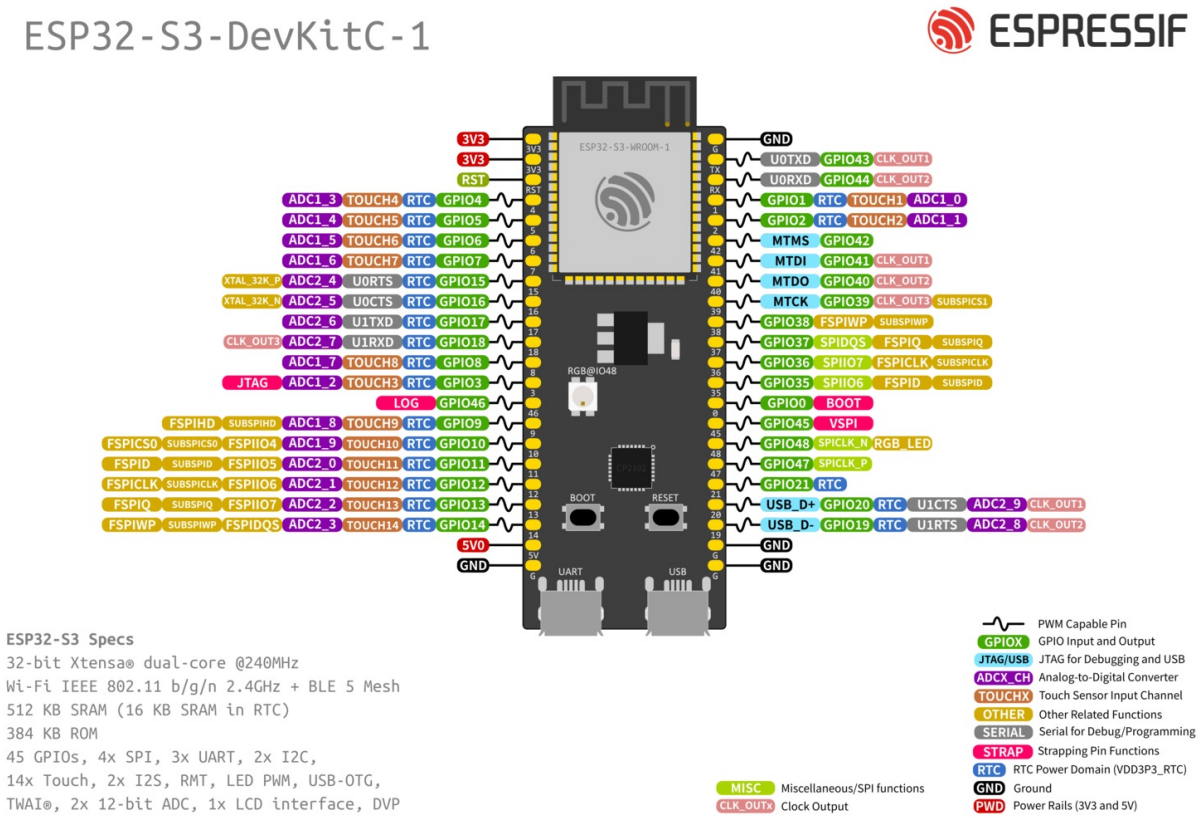

Fig. 8: ESP32-S3-DevKitC-1 Pin Layout (click to enlarge)