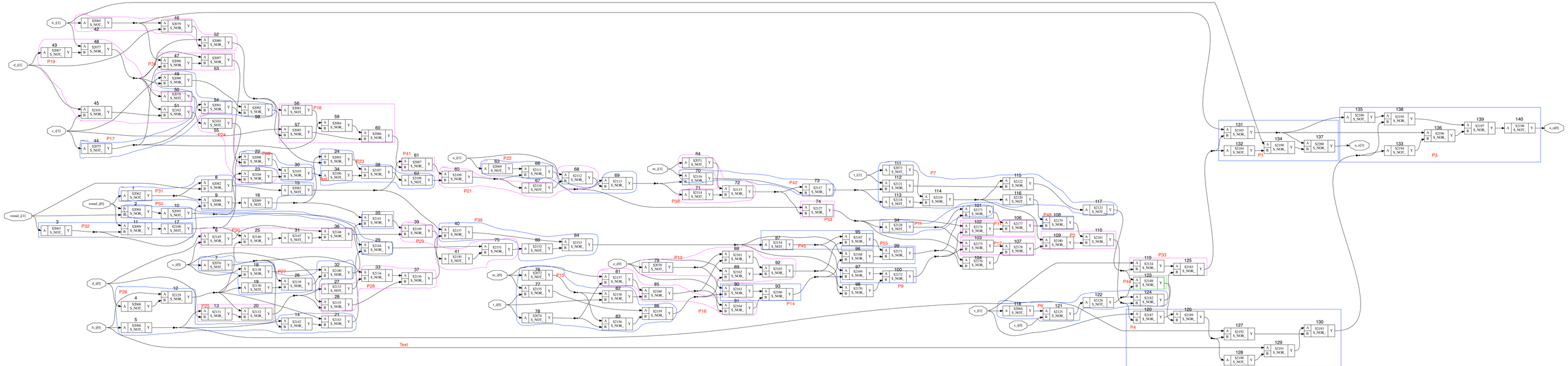
d_i[1]
c_i[1]
b_i[1]
round_i[1]
round_i[0]
d_i[0]
c_i[0]
b_i[0]
a_i[1]
m_i[1]
l_i[1]
a_i[0]
m_i[0]
l_i[0]
a_o[1]
c_o[1]
a_o[0]
Text
P1
P3
P4
P5
P6
P7
P9
P11
P13
P14
P16
P17
P18
P19
P21
P22
P23
P24
P25
P26
P27
P28
P29
P30
P31
P32
P33
P38
P39
P41
P42
P45
P48
P49
P50
P53
P55

md5Core