High-Performance Computing Infrastructure for NextGen Water Resources Modeling: CIROH's R2OHC HPC Platform

Trupesh Patel

trpatel2@ua.edu

December 17, 2025

AGU25

THE UNIVERSITY OF ALABAMA | Alabama Water Institute

Authors

Arpita Patel
Assistant Director, IT and DevOps
Alabama Water Institute

Nia Minor
Student
Computer Science, UA

Dr. James Halgren
Associate Professor
Civil and Construction Engineering, BYU

Dr. Purushotham Bangalore
James R. Cudworth Professor
Computer Science, UA

Dr. Jeffrey Carver
James R. Cudworth Professor
Computer Science, UA

Dr. Steven Burian
Professor, Director of Science at the Alabama Water Institute
Civil, Construction and Environmental Engineering, UA

AGU25

THE UNIVERSITY OF ALABAMA | Alabama Water Institute

Content

- Introduction & Motivation
- Platform Architecture
- Key Innovations
- Supported Workflows & Capabilities
- Performance & Impact
- Community & Collaborative Value
- Future Directions
- Conclusions

Content

- Introduction & Motivation
- Platform Architecture
- Key Innovations
- Supported Workflows & Capabilities
- Performance & Impact
- Community & Collaborative Value
- Future Directions
- Conclusions

Introduction & Motivation

Challenge	• Water prediction transformation requires **a robust computational infrastructure** supporting **AI, physics-based modeling,** and **operational forecasting**.
Gap	• Need for platforms supporting **community-driven modeling** at continental scales
CIROH's response	• **R2OHC**: Hybrid **HPC** & **Cloud** platform for hydrologic sciences

The R2OHC ecosystem

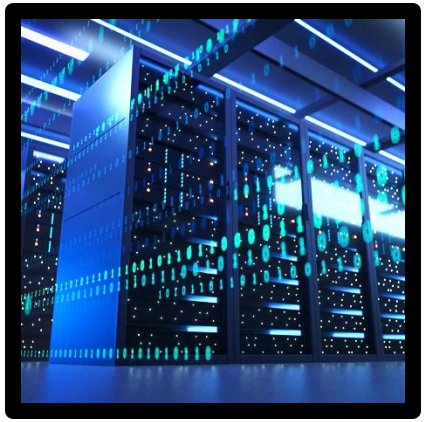

HPC Platform

Cloud Platform

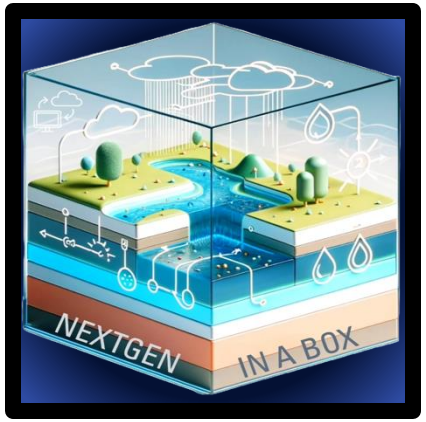

NGIAB Ecosystem

DocuHub & Portal

Content

- Introduction & Motivation
- Platform Architecture
- Key Innovations
- Supported Workflows & Capabilities
- Performance & Impact
- Community & Collaborative Value
- Future Directions
- Conclusions

Platform Architecture

Pantarhei

WUKONG

NextStream

Pantarhei *"Everything Flows" - High Performance Computing*

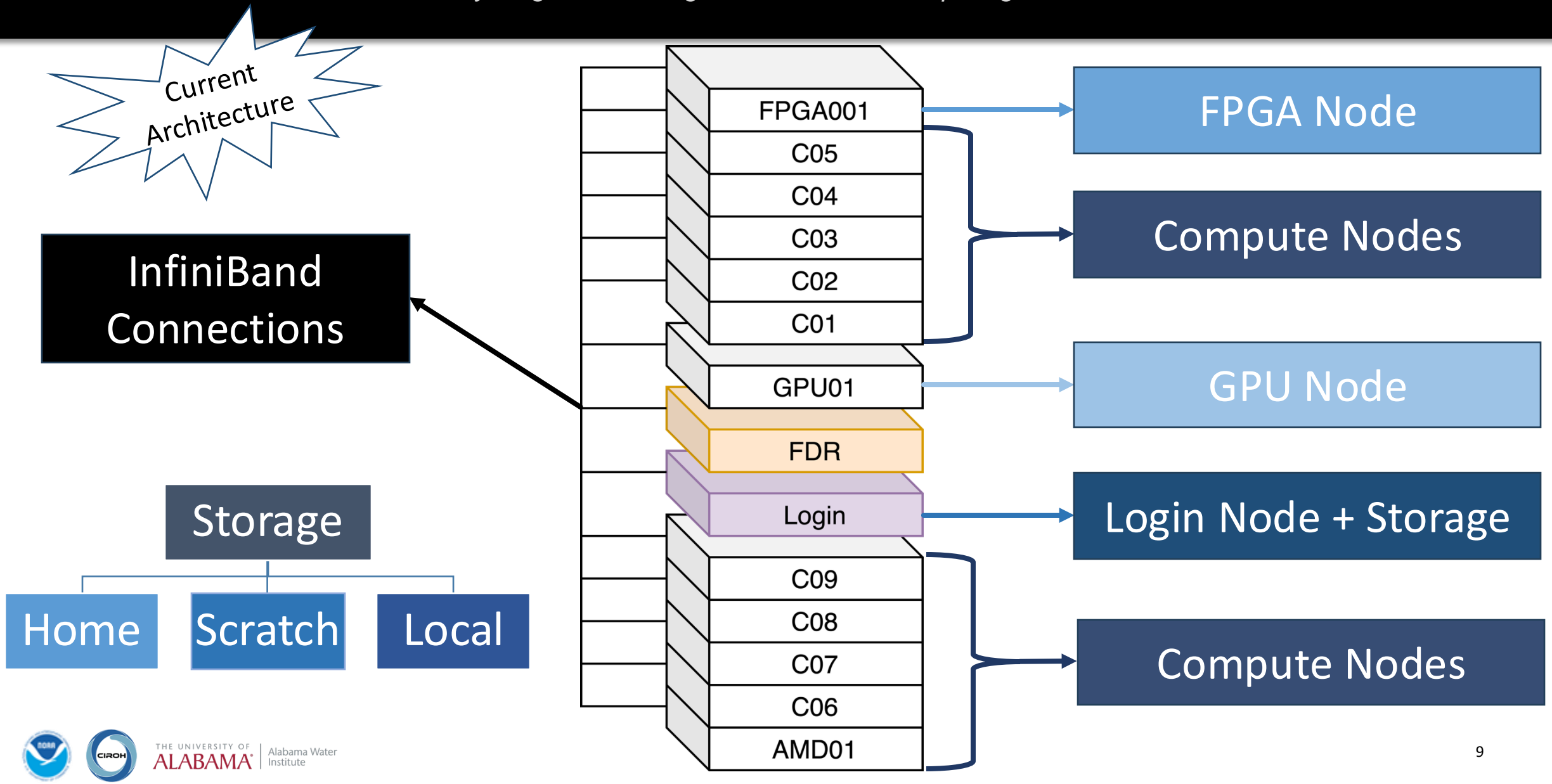

Pantarhei *"Everything Flows" - High Performance Computing*

Component	Specification
Nodes	12 total
Processors	Intel Xeon Gold / AMD EPYC
CPU Cores	Up to 64 / 256 per node
Memory	Up to 512 GB per node
Storage	148 TB total
GPU Acceleration	4x NVIDIA V100
FPGA	1 dedicated node
Software Stack	916 Installed Software

Pantarhei *"Everything Flows" - High Performance Computing*

NEXT Architecture

UPGRADE
InfiniBand Connections

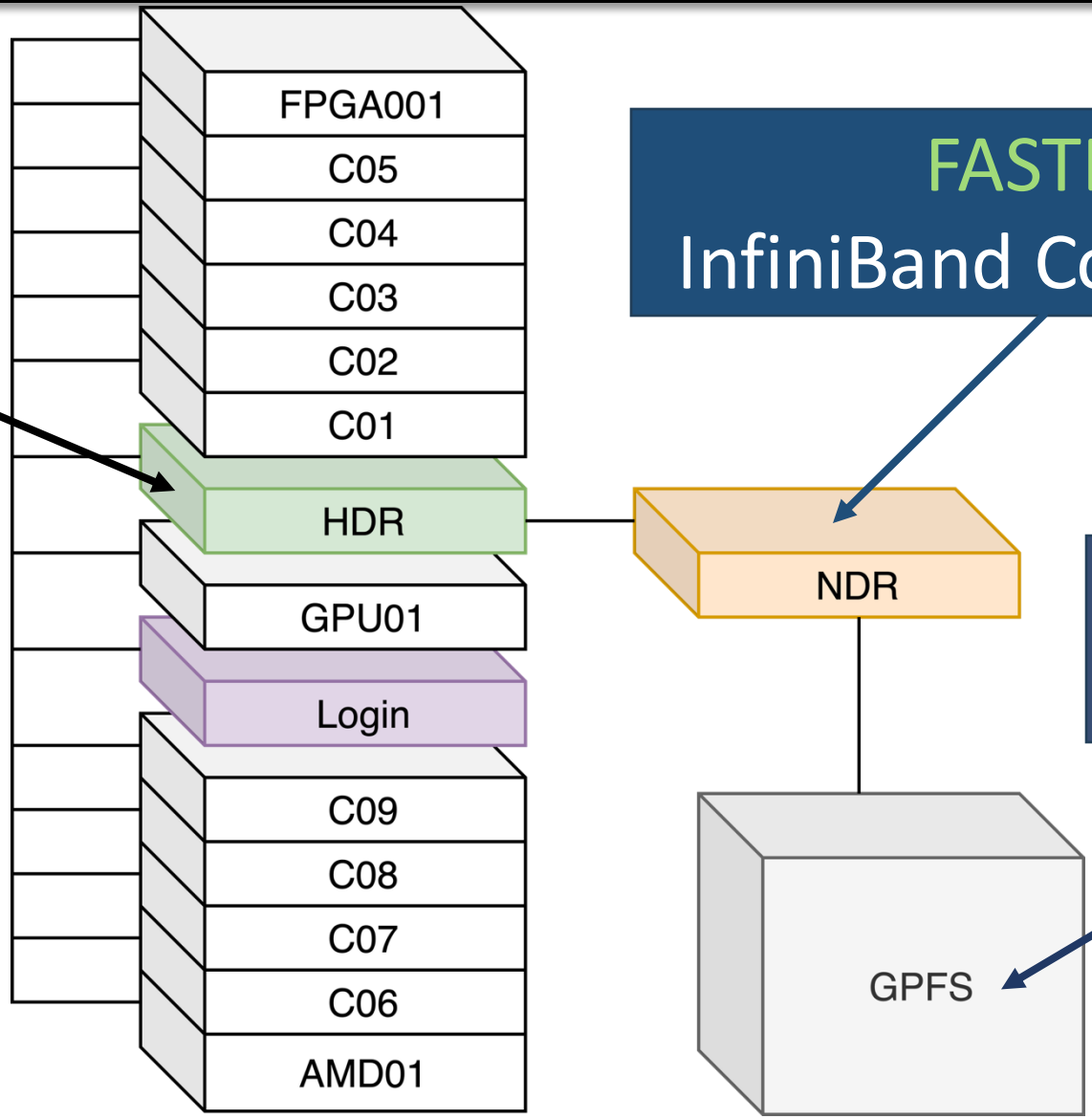

FASTER
InfiniBand Connection

NEW
Parallel File System

Wukong

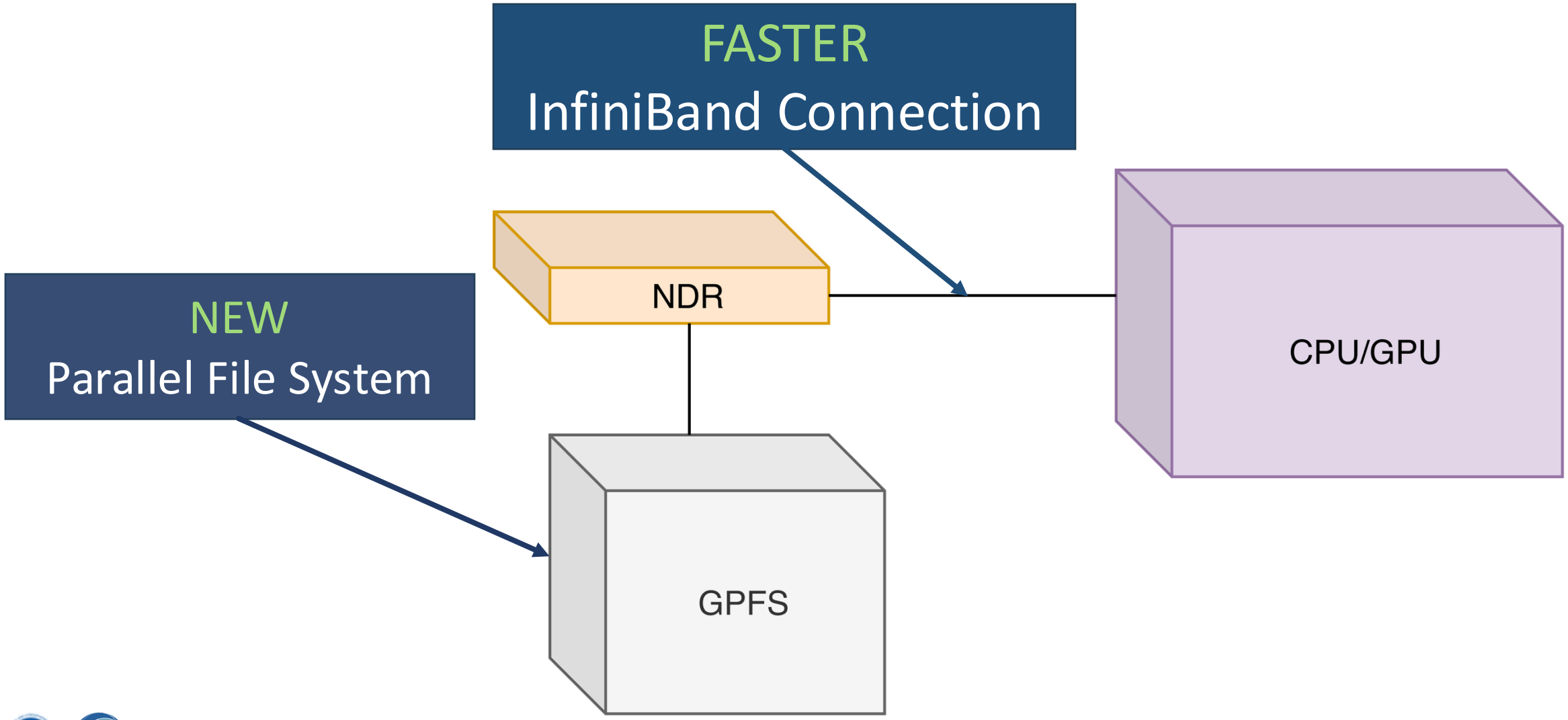
FASTER
InfiniBand Connection
NDR
CPU/GPU
NEW
Parallel File System
GPFS

Wukong

Component	Specification
Nodes	1 total
Processors	Intel Xeon Platinum
CPU Cores	208 per node
Memory	1 TB per node
Storage	56 TB total
GPFS	700 TB total
GPU Acceleration	8x NVIDIA A100 – SMX4 – 80GB
Software Stack	205 Installed Software

NextStream

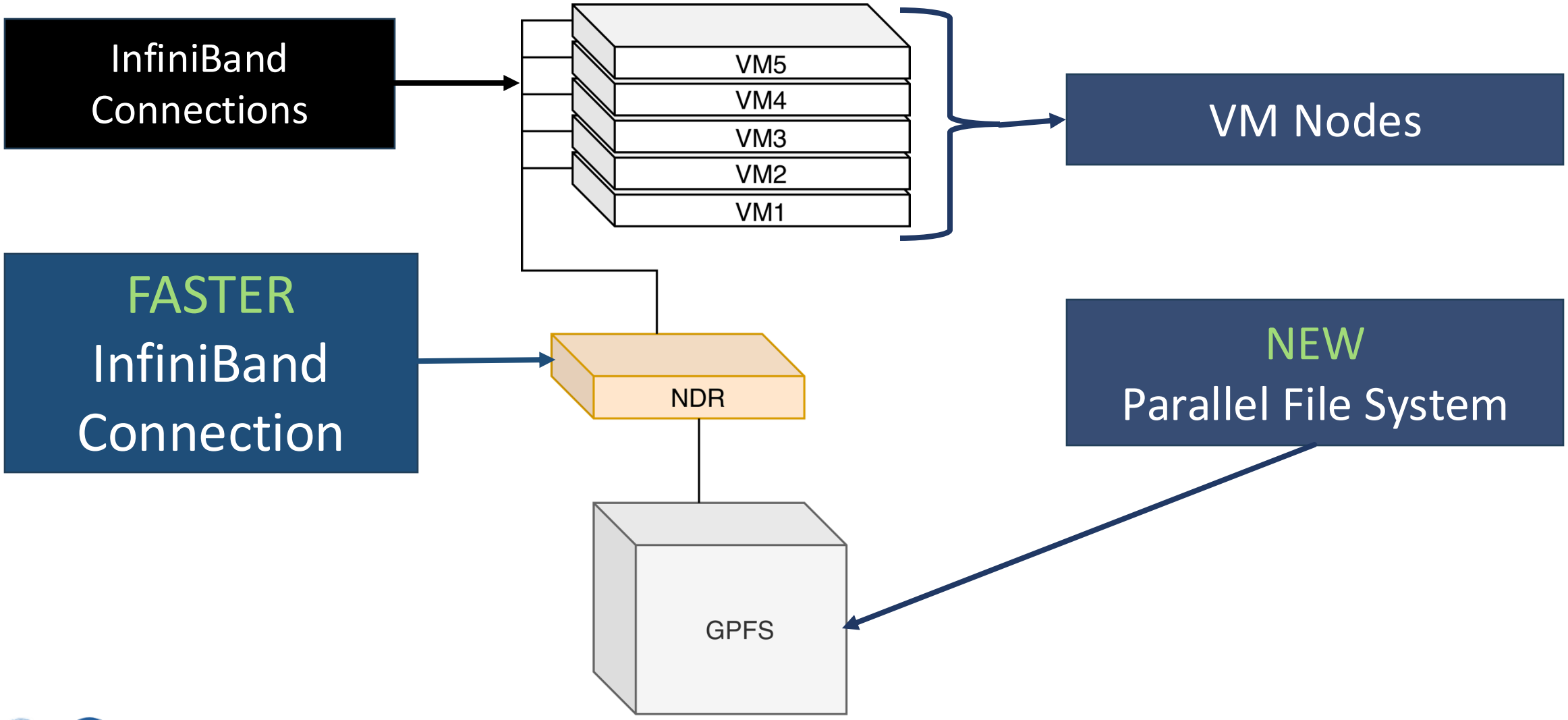
InfiniBand Connections
VM5
VM4
VM3
VM2
VM1
VM Nodes
FASTER
InfiniBand Connection
NDR
NEW
Parallel File System
GPFS

NextStream

Component	Specification
Nodes	5 total
Processors	AMD EPYC 7513
CPU Cores	124 per node
Memory	1 TB per node
Storage	32 TB per node
GPFS	700 TB total

Platform Utilizations

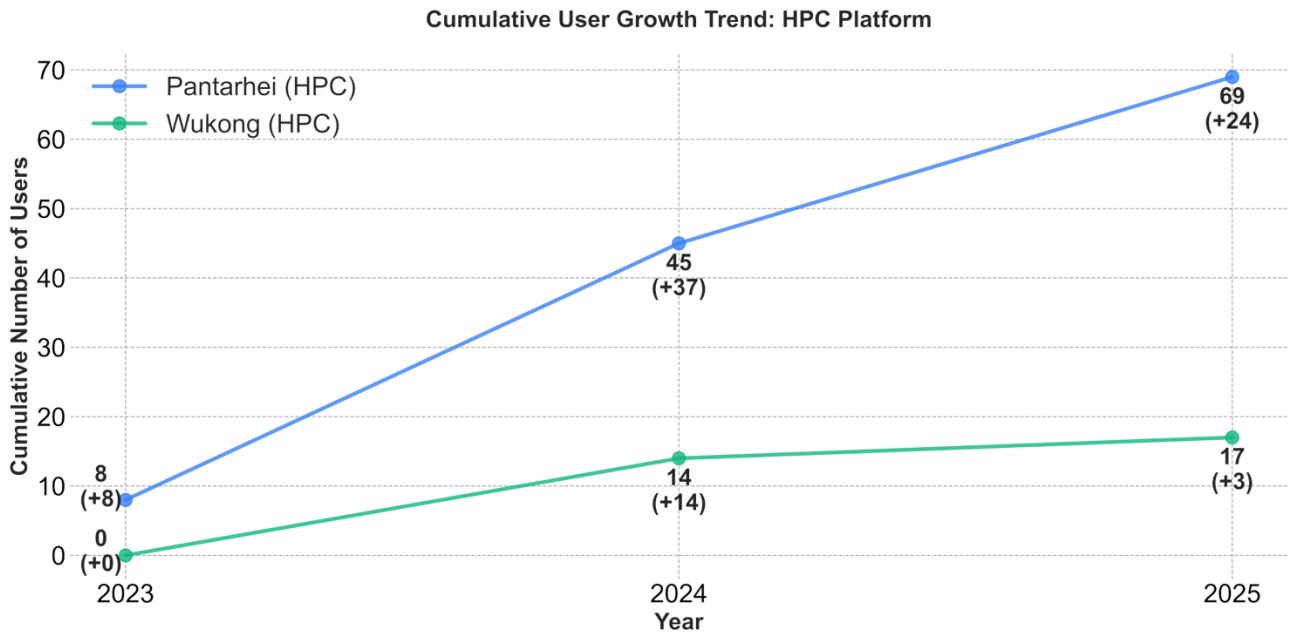

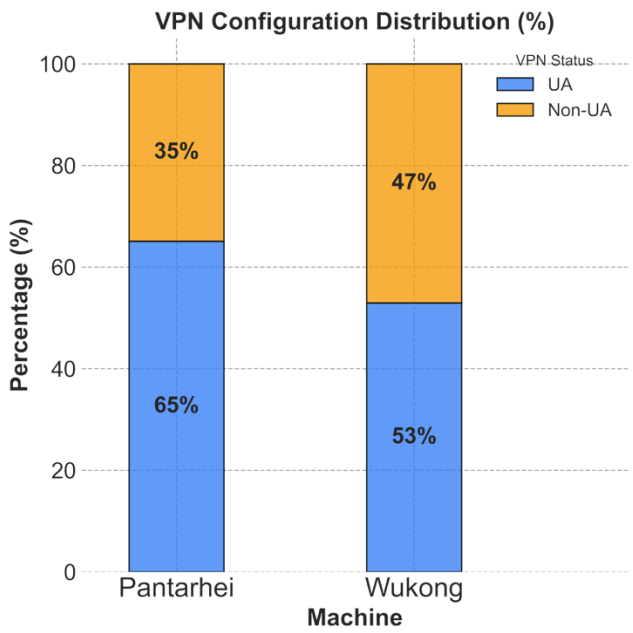

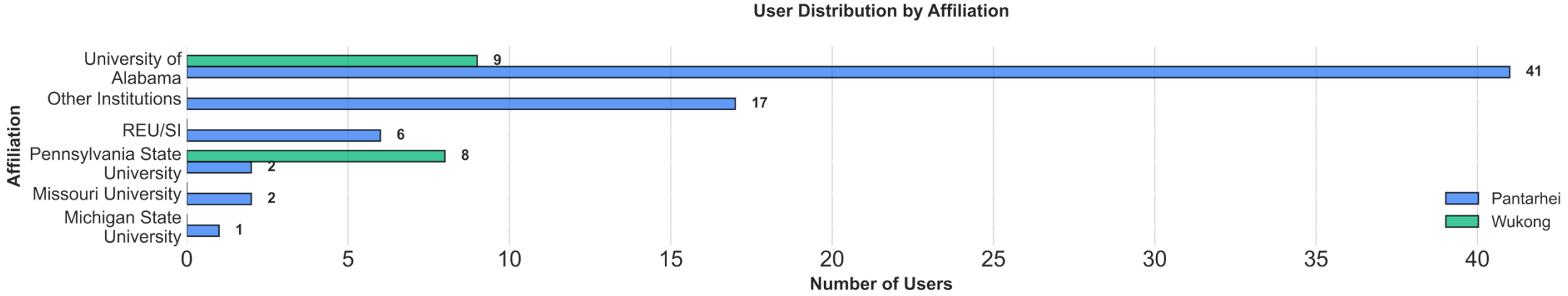

Content

- Introduction & Motivation
- Platform Architecture
- Key Innovations
- Supported Workflows & Capabilities
- Performance & Impact
- Community & Collaborative Value
- Future Directions
- Conclusions

Key Innovations

Innovation	What It Does	Research Value
Automated Pipelines	• Streamlined workflows from development to production	• Accelerates research-to-operations transition
Standardized Interfaces	• Common APIs and tools across platforms	• Lowers the barrier for new users • Enables cross-institutional collaboration
Containerized Environments	• Docker/Singularity support	• Ensures reproducibility • Portable across HPC and Cloud
Integrated Data Management via NRDS	• Daily NextGen simulations archived on AWS • shared forcings, outputs & configurations	• Democratizes data access • Community can validate & iterate without re-running simulations

Content

- Introduction & Motivation
- Platform Architecture
- Key Innovations
- Supported Workflows & Capabilities
- Performance & Impact
- Community & Collaborative Value
- Future Directions
- Conclusions

Supported Workflows & Capabilities

Containerized Solution

- Run anywhere
- Pre-compiled images on Docker & Singularity Hub

HPC & Cloud Friendly

- Reduce the research time
- Configure multiple models
- Platform-agnostic

Simplifies NextGen Access

- Lower learning curve
- Compare model performance
- Facilitates accessibility and accelerates modeling

Collaborative Modeling Tool

- Easy to use
- Reproducible outcomes
- Increase collaboration

Supported Workflows & Capabilities

Running NGIAB on HPC

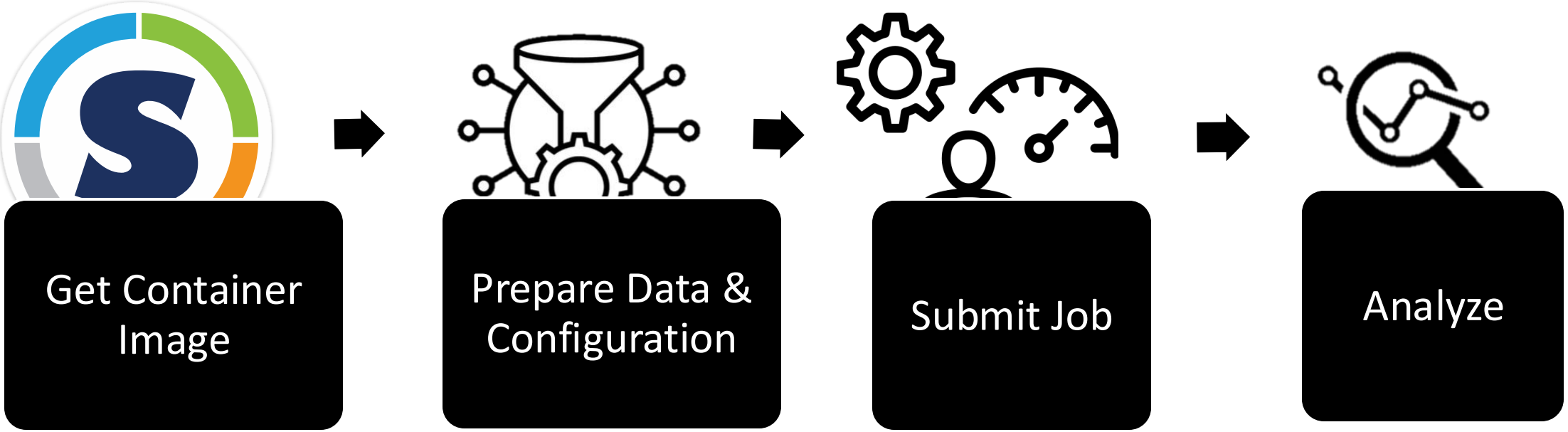

Pull NGIAB Container

- Command

```
singularity pull library://ciroh-it-support/ngiab/ciroh-ngen-singularity
```

- Key points
  - One-time download
  - Pre-compiled NextGen framework
  - The same image works on any HPC (e.g., Pantarhei, Anvil) or a local machine

Prepare Input Data & Configuration

- Command

```
uvx ngiab-prep -i gage-01013500 -sfr --start 2017-01-01
--end 2023-01-02
```

- Key points
  - Single command setup
  - Auto-downloads forcing data, hydrofabric, configurations
  - Specify gage ID, date range, and options

Submit HPC Job

- Simplified Slurm script

```
#SBATCH --ntasks=64
#SBATCH --partition=long

singularity run --bind $data:/ngen/ngen/data \
    ciroh-ngen-singularity_latest.sif \
    /ngen/ngen/data auto $SLURM_NTASKS local
```

- Key points
  - Portable across all HPC systems
  - Scales with available resources
  - Same container, change paths

Demo on Local Machine

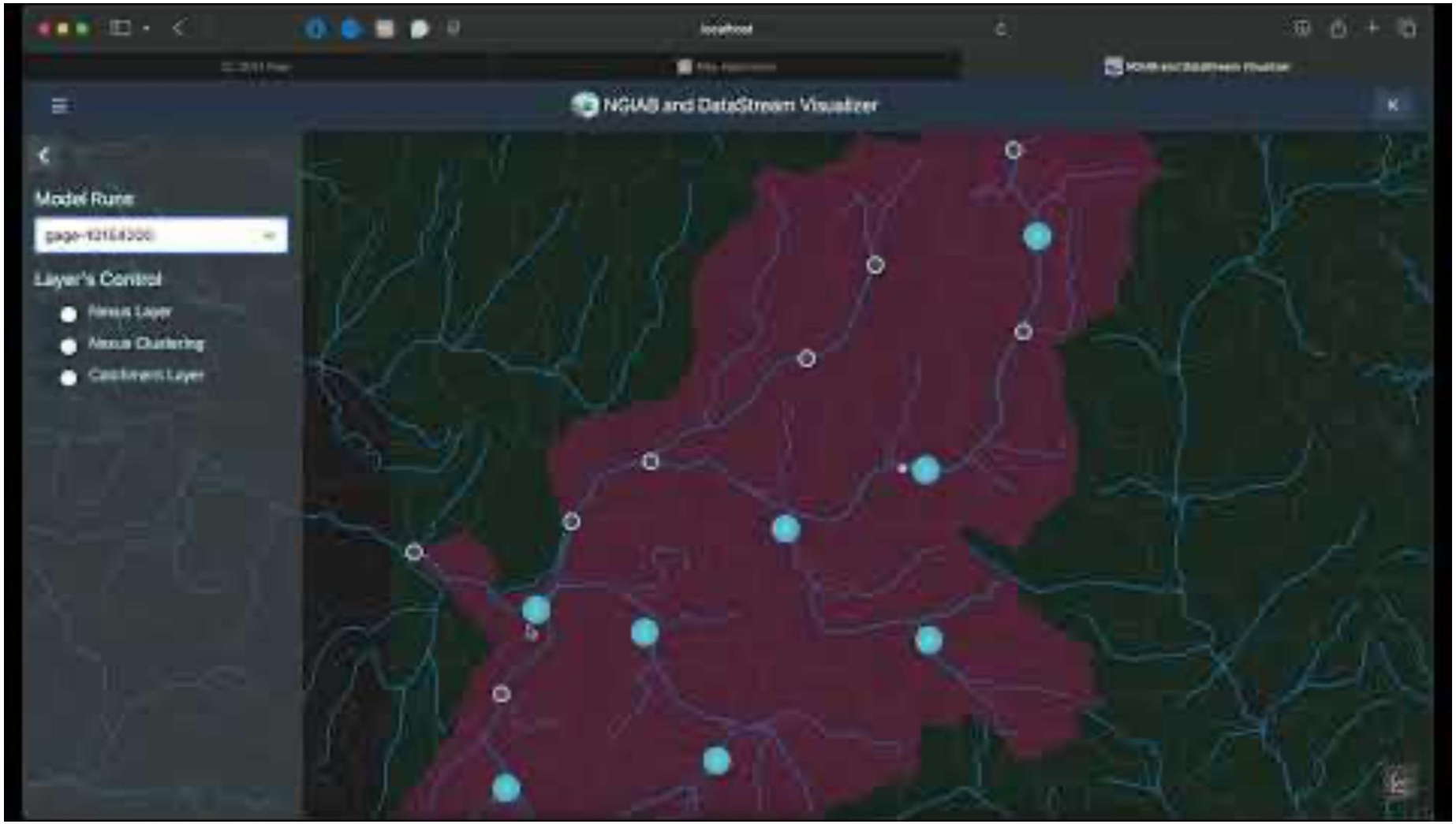

Scan QR to watch on YouTube

NGIAB Ecosystem

- Supported Models

Hydrology	Routing	Land Surface
CFE	t-route	Noah-OWP-Modular
TOPMODEL		SoilFreezeThaw
SLoTH		SoilMoistureProfiles
LSTM Rust		
PET		

NGIAB Ecosystem

- Tools by Workflow Stage

Stage	Tool
Data Prep	• NGIAB-DataPreprocess • Forcing Processor
Execution	• NGIAB-HPCInfra • NGIAB-CloudInfra
Evaluation	• NGIAB-TEEHR
Visualization	• NGIAB-Visualizer
Automation	• Datastream CLI • NGEN-DataStream

Content

- Introduction & Motivation
- Platform Architecture
- Key Innovations
- Supported Workflows & Capabilities
- Performance & Impact
- Community & Collaborative Value
- Future Directions
- Conclusions

Performance & Impact

Pantarhei Cluster (for gage-01013500, 2017 to 2023)

Processes	Original (avg)	Optimized (avg)	Local Speedup
1	~25,400 sec	~21,745 sec	1x (baseline)
8	~4,952 sec	~5,256 sec	~4x
16	~2,677 sec	~1,533 sec	~14x
32	~1,569 sec	~844 sec	~26x
64	~932 sec	~485 sec	**~45x**

Version	64-core Runtime	Improvement
Original (no-local)	~15 min	baseline
Optimized (local)	~8 min	**~48% faster**

Performance & Impact

Anvil Cluster (Preliminary results)

Processes	Completed Runs	Original (avg)	Optimized (avg)	Notes
1	1 of 10	—	~36,000	Limited data*
2	0 of 10	—	—	Pending*
4	0 of 10	—	—	Pending*
8	4 of 10	—	~41,322	High variance
16	7 of 10	~70,594	~54,848	High variance
32	10 of 10	~8,182*	~8,731	Consistent
64	11 of 11	~4,314	~2,280	Consistent

*Additional benchmarking on ACCESS Anvil is ongoing

Content

- Introduction & Motivation
- Platform Architecture
- Key Innovations
- Supported Workflows & Capabilities
- Performance & Impact
- Community & Collaborative Value
- Future Directions
- Conclusions

Community & Collaborative Value

Resource Sharing	Standardized Tools	Knowledge Transfer
Cross-institutional access	Common APIs & frameworks	Research ↔ Operations
Reduces barriers for smaller groups	Accelerates innovation	Training & documentation
50+ institutions served	NGIAB ecosystem	Community workshops

Metric	Value
352	Total users of R2OHC
50+	Institutions
64	Active projects

The R2OHC ecosystem

- **Session H41Q** | Hall EFG (Poster Hall) (NOLA CC)
- Thursday, December 18, 2025 @8:30 AM – 12:00 PM CST

- Cloud Infrastructure for NextGen Water Resources Modeling: CIROH's R2OHC Cloud Platform
- **H41Q-1425**

Cloud Platform

- Advancing Hydrological Modeling: CIROH's NextGen In A Box (NGIAB) and Enhanced Tools for Community-Driven Research
- **H41Q-1427**

NGIAB Tools

- CIROH DocuHub and Portal: Knowledge Management System for Collaborative Water Resources Research
- **H41Q-1426**

DocuHub & Portal

Content

- Introduction & Motivation
- Platform Architecture
- Key Innovations
- Supported Workflows & Capabilities
- Performance & Impact
- Community & Collaborative Value
- Future Directions
- Conclusions

Future Directions

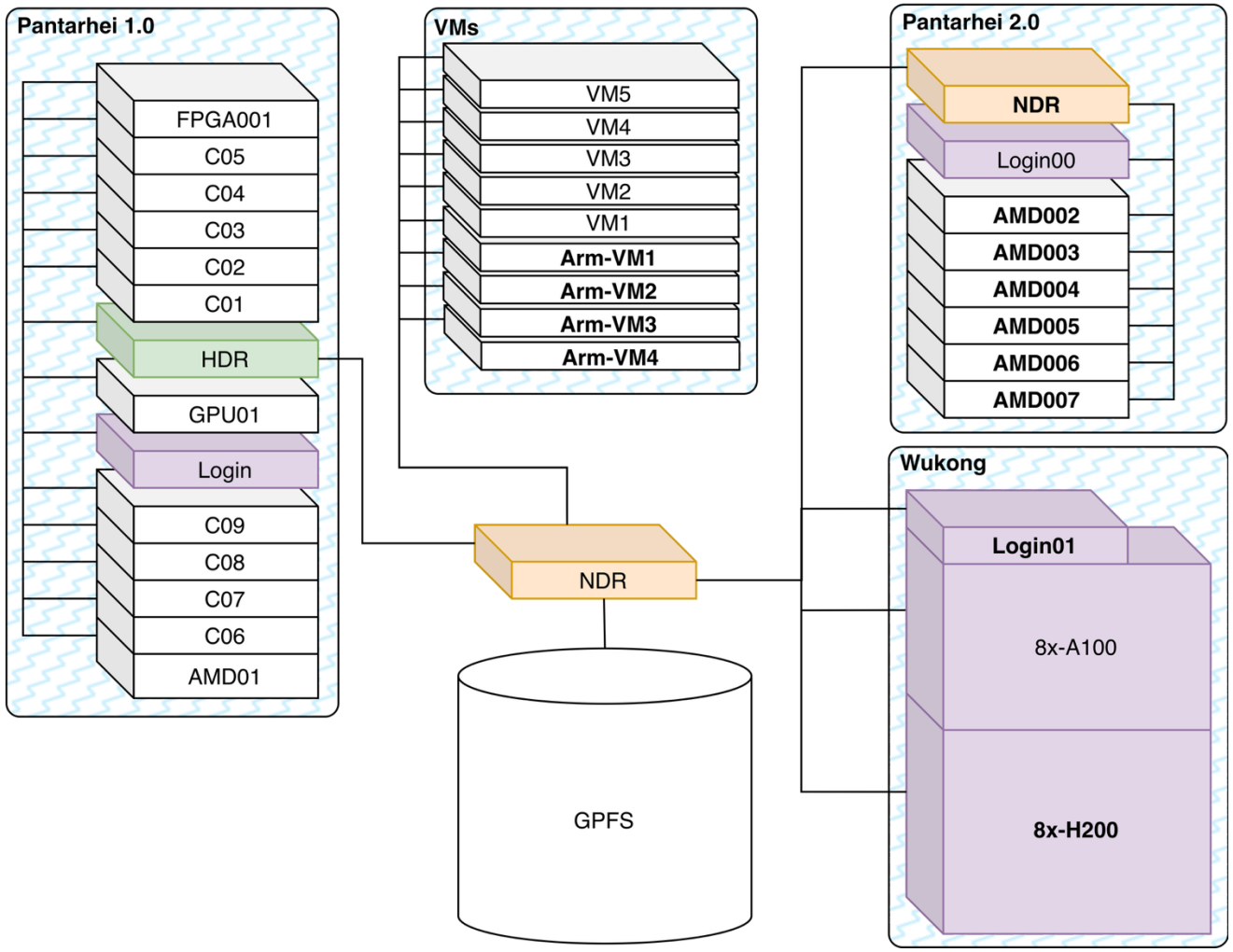

- Connect all to a **central authentication**
- **Expand** storage
- **Connect** and **share** storage across all systems
- **Expand** compute capacity
- Experiments on **additional HPC** systems
- **New** models
- **Enhanced** tools

Content

- Introduction & Motivation
- Platform Architecture
- Key Innovations
- Supported Workflows & Capabilities
- Performance & Impact
- Community & Collaborative Value
- Future Directions
- Conclusions

Conclusions

Challenge	Solution	Impact
Need for robust computational infrastructure	R2OHC HPC platform	352 users, 50+ institutions
Complex model setup	NGIAB containerized workflows	Reproducible, portable research
Scaling limitations	HPC optimization	~45x speedup demonstrated
Data access barriers	NRDS on AWS	Democratized access to simulations

Acknowledgments

Funding	Resources	Support
NOAA Award NA22NWS4320003	Pantarhei HPC (CIROH)	CIROH Cyberinfrastructure Team
NSF ACCESS Allocation EES240087	Purdue Anvil (ACCESS)	UA HPC Center Services Team

AGU25

THE UNIVERSITY OF ALABAMA | Alabama Water Institute

Special Thank You!

AGU25

THE UNIVERSITY OF ALABAMA | Alabama Water Institute

CIROH

Any Questions?

Reference

CIROH DocuHub

AWS Bucket of NRDS Run

NGIAB Tools

NGIAB-HPCInfra GitHub Repository

NRDS Tools