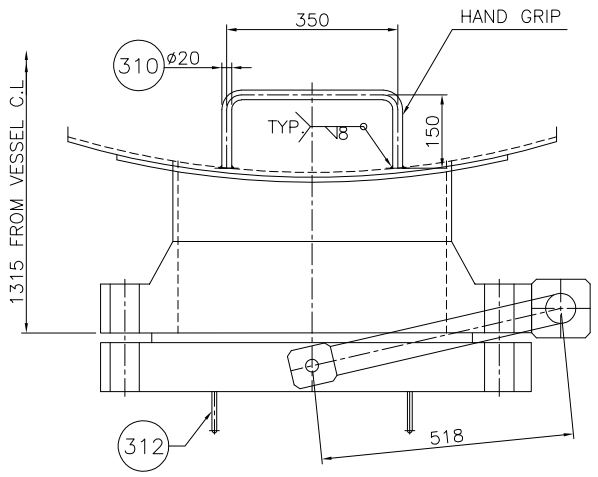

PLAN VIEW

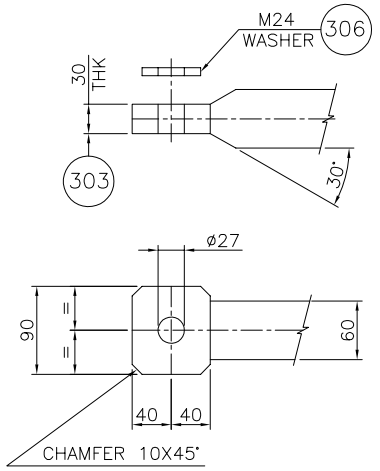

DETAIL-1

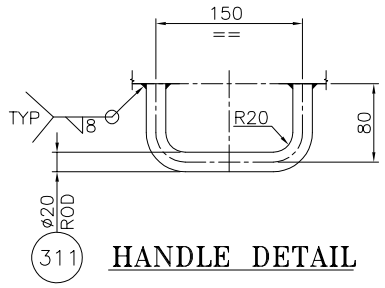

HANDLE DETAIL

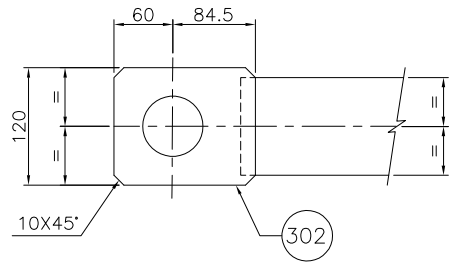

DETAIL OF ITEM NO. 33

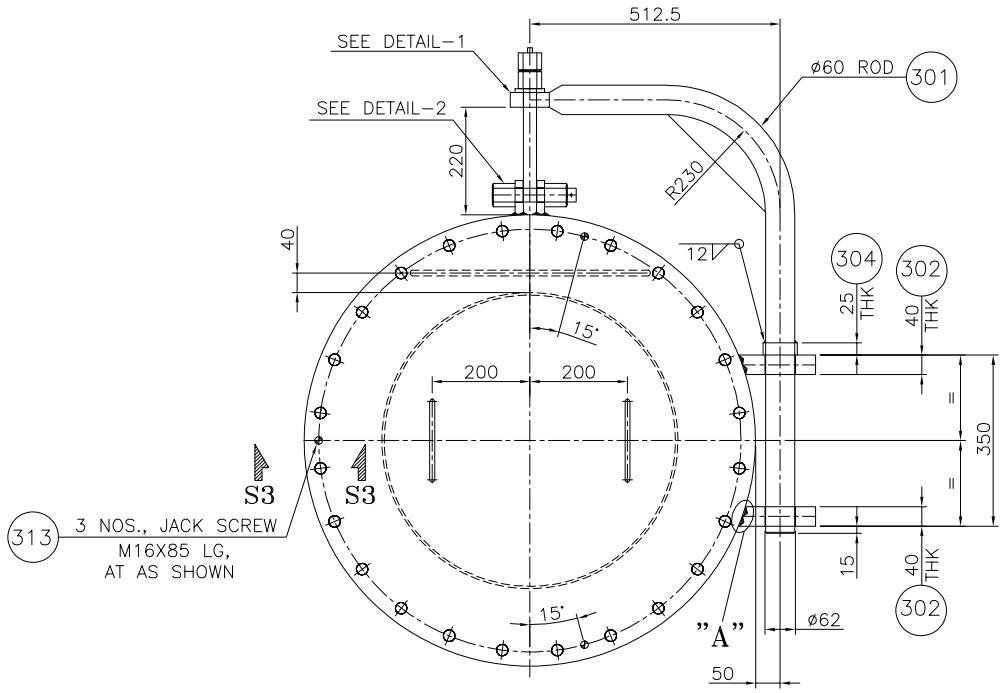

ELEVATION VIEW

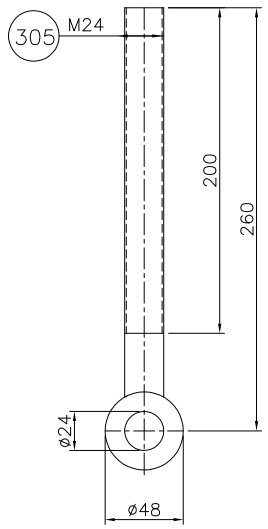

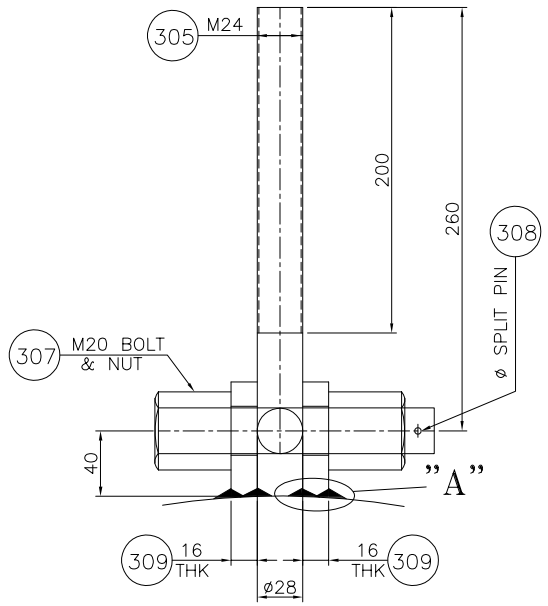

DETAIL- 2

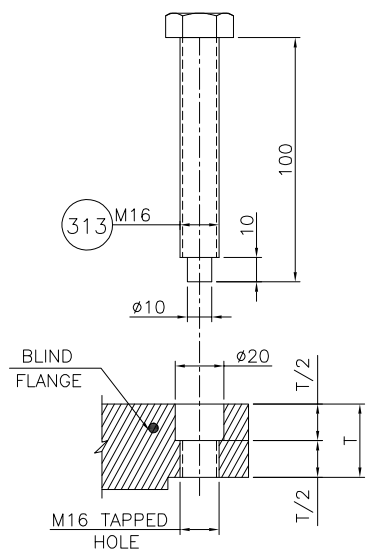

SECTION S3-S3
DETAIL OF JACK SCREW

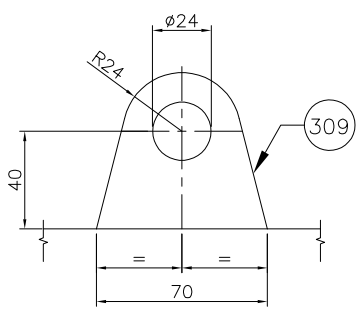

DETAIL OF
CLEAT FOR EYE BOLT

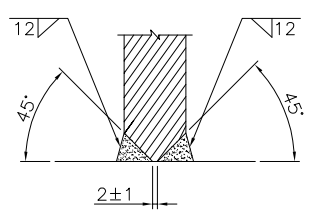

TYP. WELD DETAIL-"A"

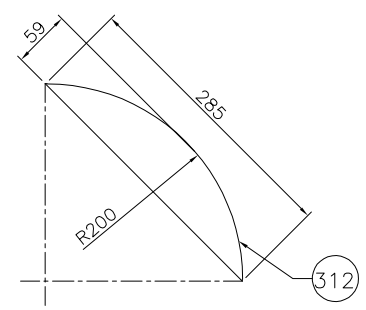

DETAIL OF STIFFENER PLATE