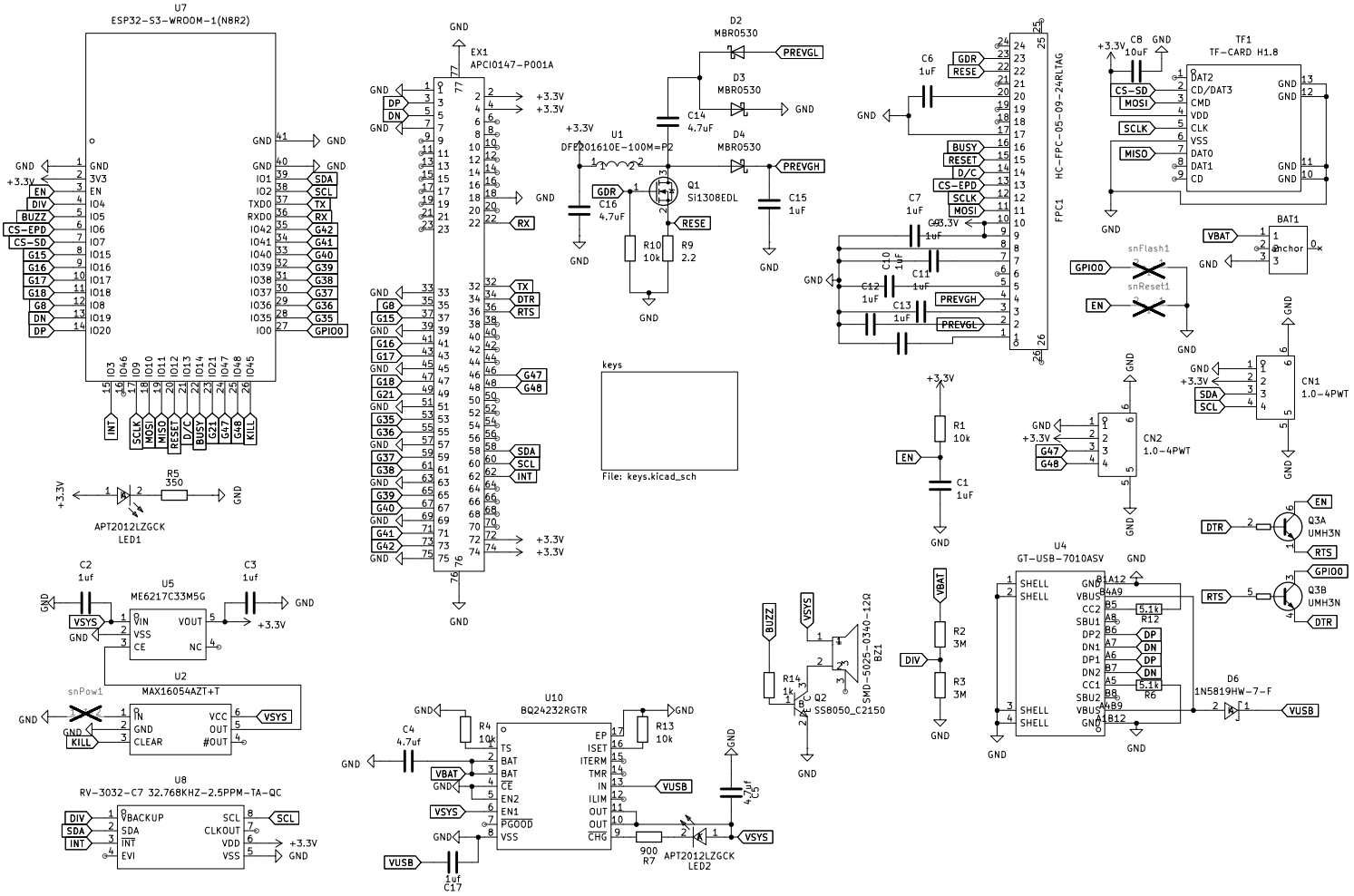
U7
ESP32-S3-WROOM-1(N8R2)
EX1
APCI0147-P001A
D2
MBR0530
D3
MBR0530
D4
MBR0530
U1
DFE201610E-100M=P2
Q1
SI1308EDL
FPC1
HC-FPC-05-09-24RLTAG
TF1
TF-CARD H1.8
BAT1
anchor
CN1
1.0-4PWT
CN2
1.0-4PWT
keys
File: keys.kicad_sch
R5
350
APT2012LZGCK
LED1
U5
ME6217C33M5G
U2
MAX16054AZT+T
U8
RV-3032-C7 32.768KHZ-2.5PPM-TA-QC
U10
BQ24232RGTR
APT2012LZGCK
LED2
U4
GT-USB-7010ASV
D6
1N5819HW-7-F
Q3A
UMH3N
Q3B
UMH3N
Q2
SS8050_C2150
BZ1
SMD-5025-0340-12Ω
snFlash1
snReset1
snPow1

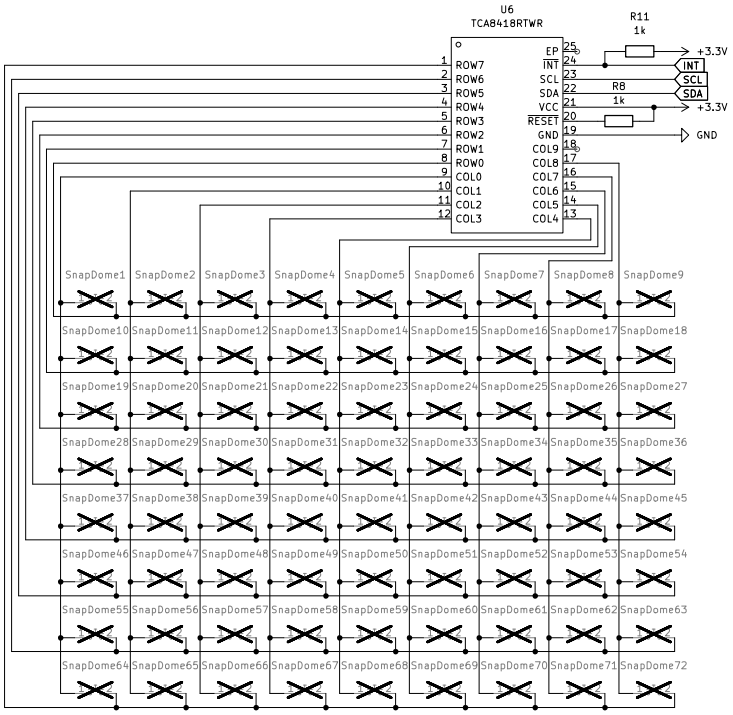
U6
TCA8418RTWR
R11
1k
R8
1k
+3.3V
+3.3V
GND
INT
SCL
SDA
ROW7
ROW6
ROW5
ROW4
ROW3
ROW2
ROW1
ROW0
COL0
COL1
COL2
COL3
EP
INT
SCL
SDA
VCC
RESET
GND
COL9
COL8
COL7
COL6
COL5
COL4
SnapDome1
SnapDome2
SnapDome3
SnapDome4
SnapDome5
SnapDome6
SnapDome7
SnapDome8
SnapDome9
SnapDome10
SnapDome11
SnapDome12
SnapDome13
SnapDome14
SnapDome15
SnapDome16
SnapDome17
SnapDome18
SnapDome19
SnapDome20
SnapDome21
SnapDome22
SnapDome23
SnapDome24
SnapDome25
SnapDome26
SnapDome27
SnapDome28
SnapDome29
SnapDome30
SnapDome31
SnapDome32
SnapDome33
SnapDome34
SnapDome35
SnapDome36
SnapDome37
SnapDome38
SnapDome39
SnapDome40
SnapDome41
SnapDome42
SnapDome43
SnapDome44
SnapDome45
SnapDome46
SnapDome47
SnapDome48
SnapDome49
SnapDome50
SnapDome51
SnapDome52
SnapDome53
SnapDome54
SnapDome55
SnapDome56
SnapDome57
SnapDome58
SnapDome59
SnapDome60
SnapDome61
SnapDome62
SnapDome63
SnapDome64
SnapDome65
SnapDome66
SnapDome67
SnapDome68
SnapDome69
SnapDome70
SnapDome71
SnapDome72