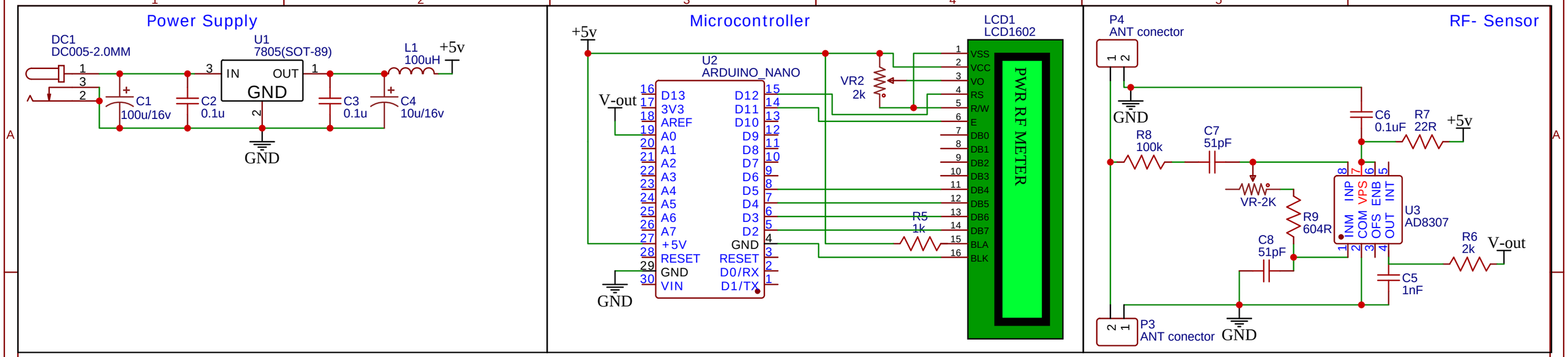

TITLE: RF-PWR-METER		REV: 1.1
EasyEDA	Company: Cuban Amateur Radio	Sheet: 1/1
	Date: 2023-12-28 Drawn By:	