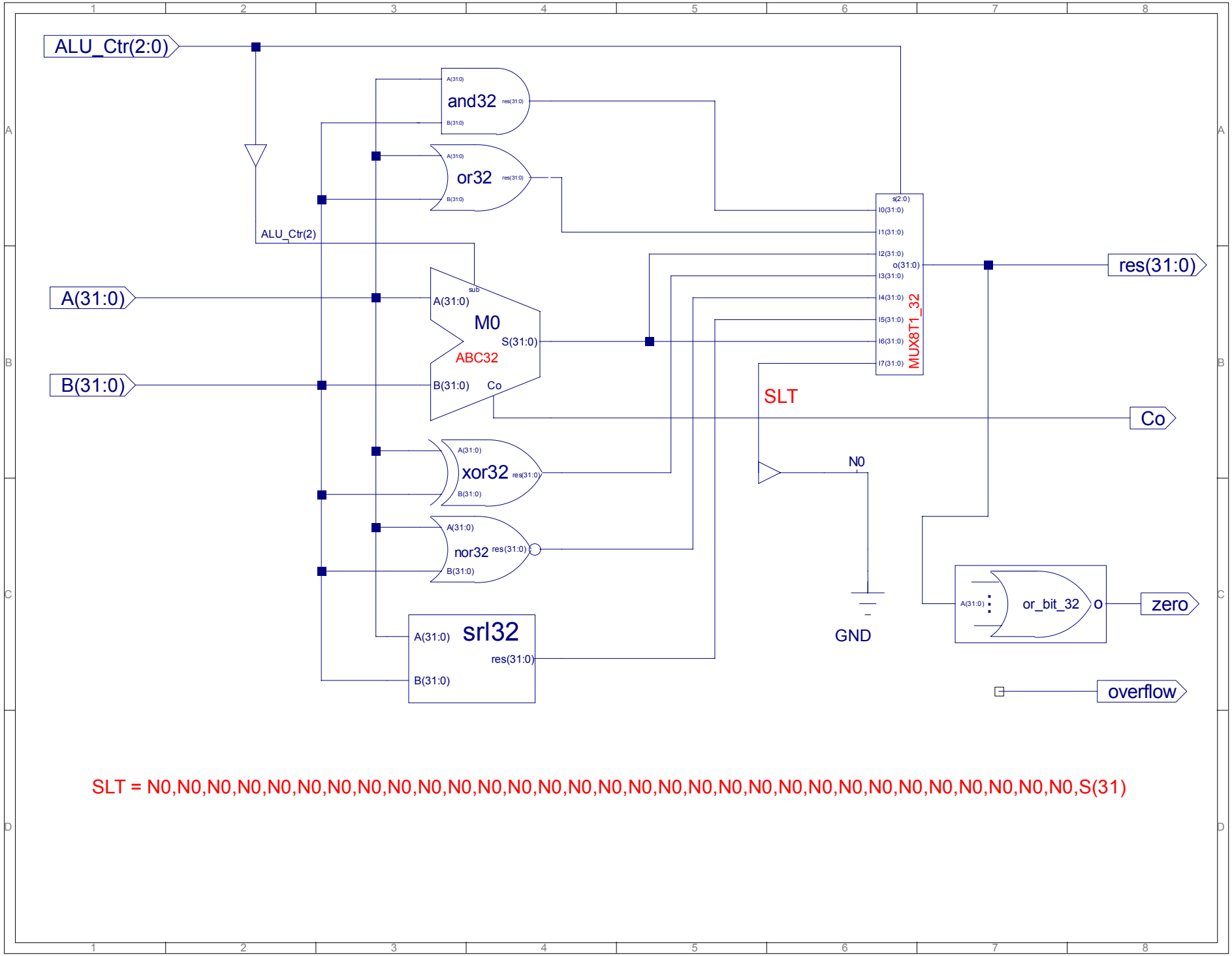
ALU_Ctr(2:0)
and32
A(31:0)
B(31:0)
res(31:0)
or32
ALU_Ctr(2)
A(31:0)
B(31:0)
M0
ABC32
sub
S(31:0)
Co
xor32
nor32
srl32
res(31:0)
s(2:0)
I0(31:0)
I1(31:0)
I2(31:0)
o(31:0)
I3(31:0)
I4(31:0)
I5(31:0)
I6(31:0)
I7(31:0)
MUX8T1_32
SLT
N0
GND
or_bit_32
o
zero
overflow
SLT = N0,N0,N0,N0,N0,N0,N0,N0,N0,N0,N0,N0,N0,N0,N0,N0,N0,N0,N0,N0,N0,N0,N0,N0,N0,N0,N0,N0,N0,N0,N0,N0,S(31)