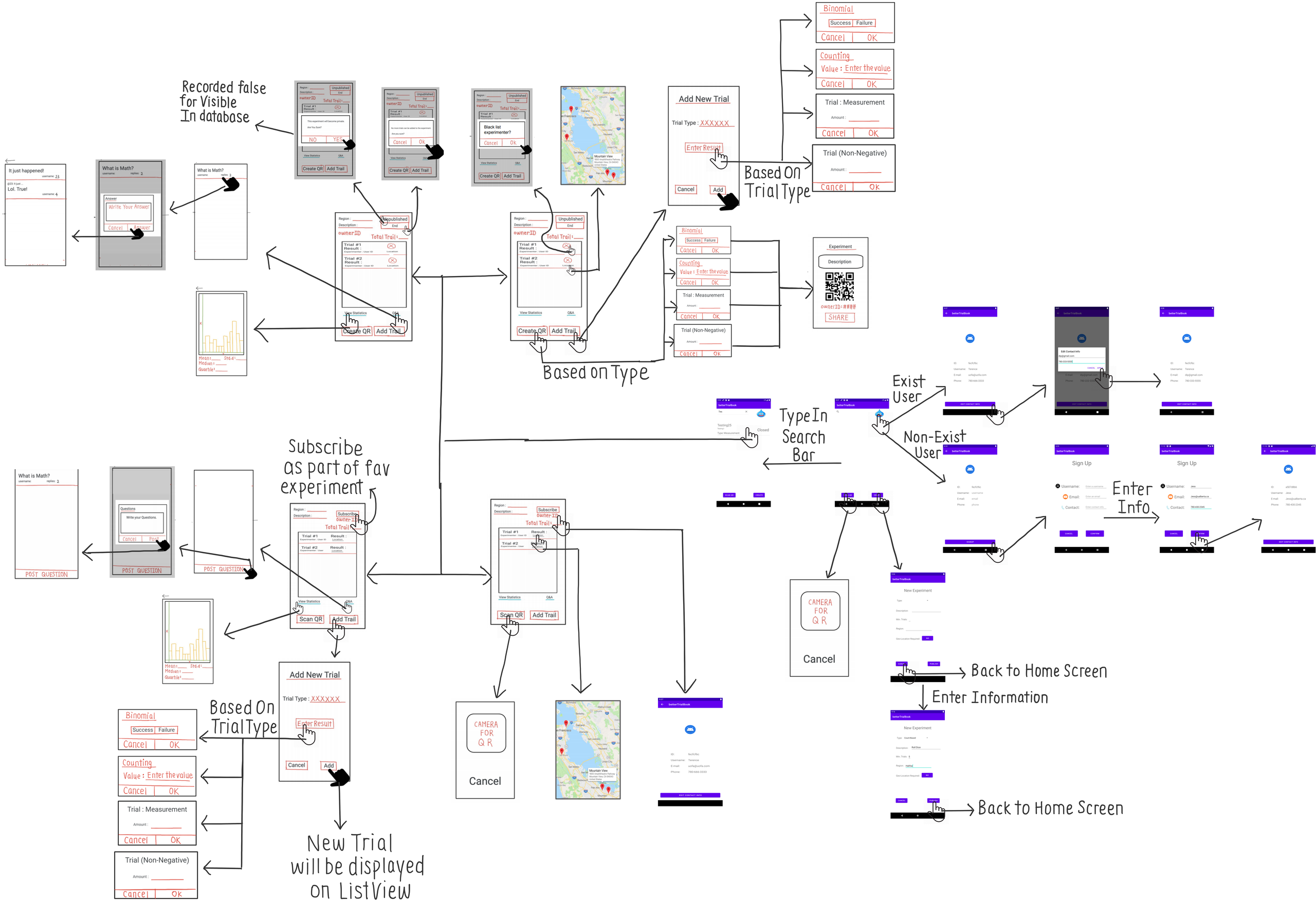
Recorded false for Visible In database
Add New Trial
Trial Type : XXXXXX
Enter Result
Cancel
Add
Based On Trial Type
Binomial
Success Failure
Cancel OK
Counting
Value : Enter the value
Trial : Measurement
Amount :
Trial (Non-Negative)
Experiment
Description
ownerID:####
SHARE
Based on Type
Exist User
Non-Exist User
Type In Search Bar
Enter Info
Sign Up
Subscribe as part of fav experiment
POST QUESTION
Scan QR
Add Trail
CAMERA FOR Q R
New Trial will be displayed on ListView
New Experiment
Back to Home Screen
Enter Information