15-110 Principles of Computing – F19

Lecture 26:
Files I/O 5

Teacher:
Gianni A. Di Caro

جامعة كارنيجي ميلون في قطر
Carnegie Mellon University Qatar

Common questions / challenges about files

- Trying to open (with a read flag) a non-existing file results into an error: how do we **check if a file exists** or not in the file system prior any attempt to open it? (to avoid that the program crashes?)
- A file might be **located anywhere in the <u>file system</u>**: how do we refer to such a file?
- How do we **search for a named file in the file system**?
- Sometimes it is appropriate to create a new folder where to put newly created files: how do we **create a new folder** from a python program?
- Opening an existing file with the write flag erases file content: how can we **check file status first**?
- A file might be too large to read, or might be not accessible for read or write to my program, or might have been modified very recently: how do we get **information about a file**?

Operations on the file system

- Module os (**Operating System**) offers a complete set of functionalities to inspect and manipulate the elements of the **file system of the computer**

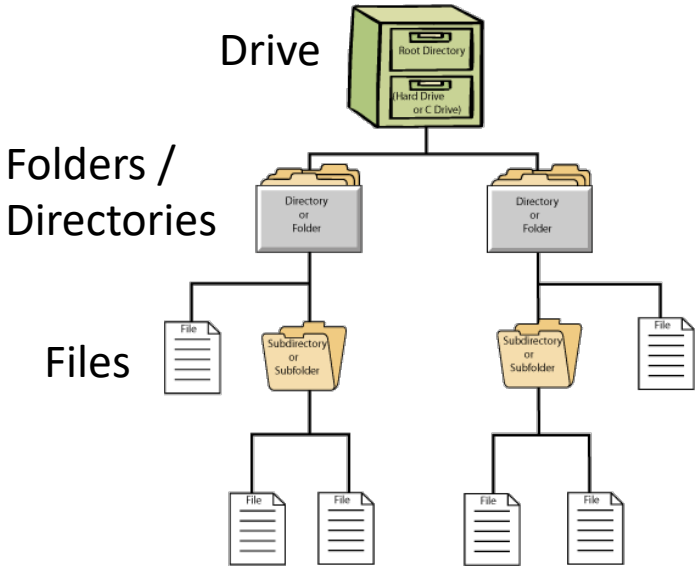

Tree (data) structure rooted at the drive: a **hierarchy of folders**

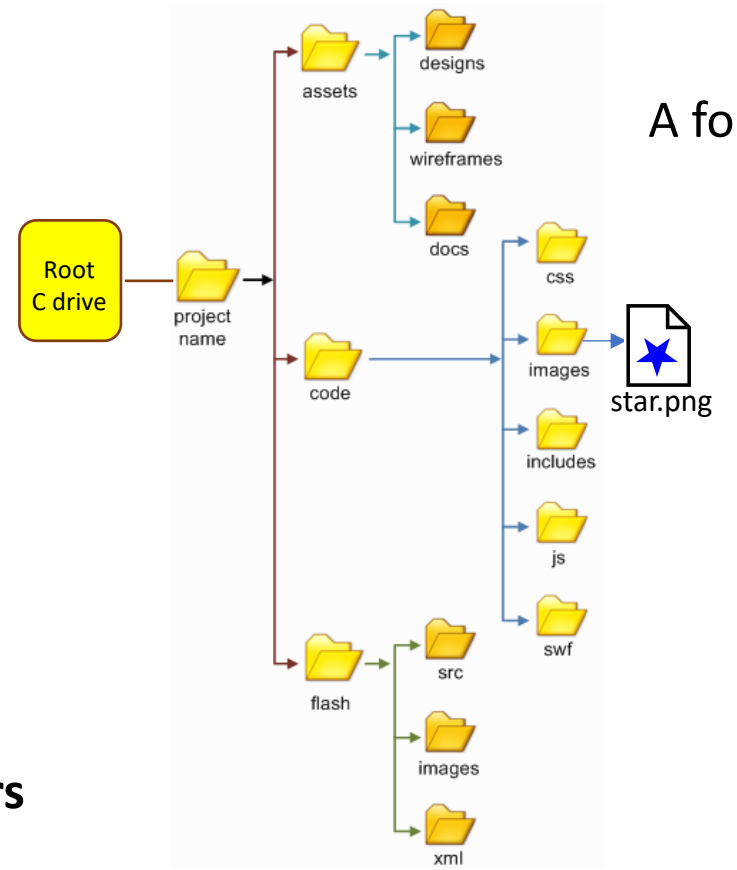

A folder / file is uniquely identified by:

- ✓ a **name**
- ✓ the **path** relative to the root of the drive

Windows:
C:\project name\code\images\star.png

Unix:
/project name/code/images/star.png

path name

A folder can contain zero or more files and/or zero or more sub-folders

Operations on the file system: get the current path / folder

- `os.getcwd()`: Returns a string with the current folder name (**c**urrent **w**orking **d**irectory), including the prefix path

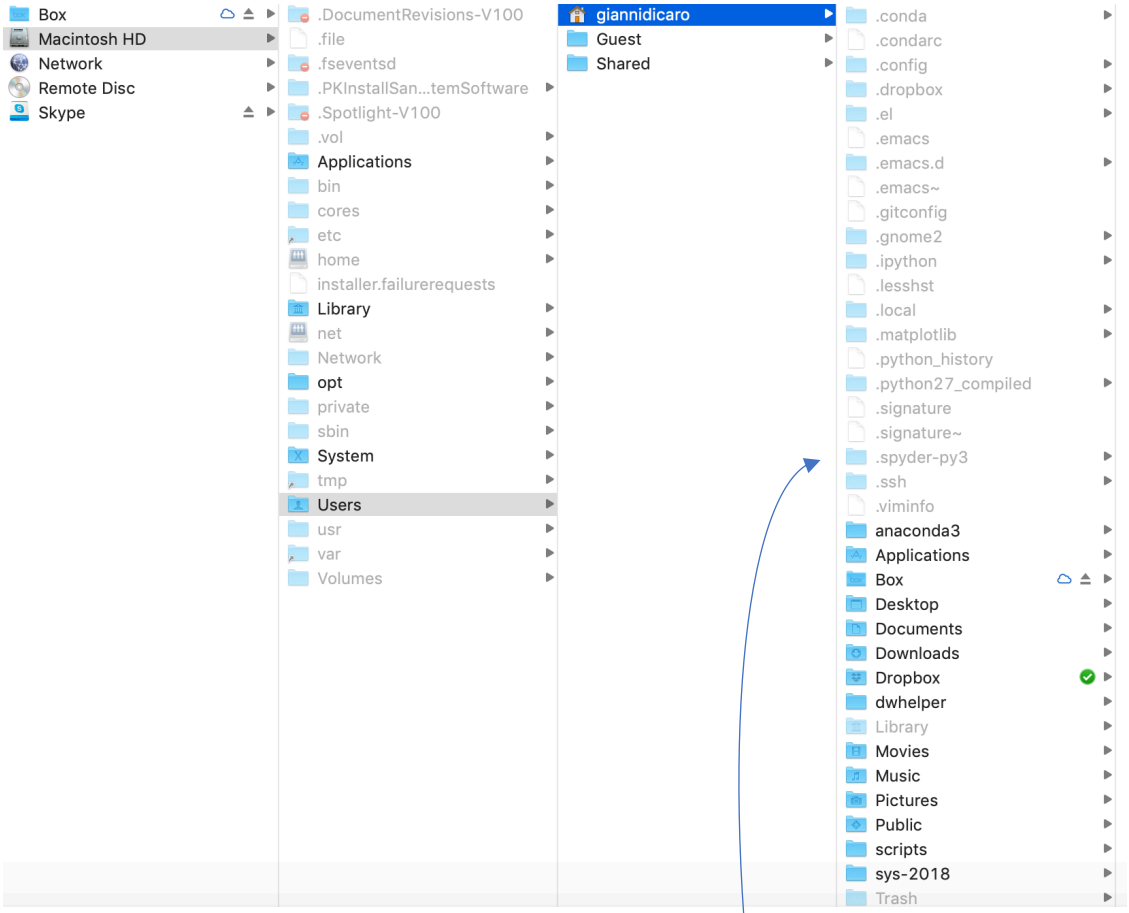

/Users/giannidicaro/.spyder-py3

```
import os

full_path = os.getcwd()
```

/Users/giannidicaro/.spyder-py3

Name of current working folder?

```
folder_start = full_path.rfind('/')
folder_name = full_path[folder_start+1:]
print(folder_name)
```

.spyder-py3

OS-dependent path strings

- Each OS (Windows, Mac, Unix, ….) can (and does) represent a path in different way ☹

Windows:
C:\Users\giannidicaro\anaconda3\bin\spyder.exe

Backslash is the separator used for directory levels

Unix / Mac:
/users/giannidicaro/anaconda3/bin/spyder

Forward slash is the separator used for directory levels

Using `os.getcwd()` is a way to get the path in the correct form for the used OS

OS-independent path strings: os.path.join()

- In *Windows* the backslash is the same as the **Escape character**, such that is has to be *protected* with \ in order to be used ☹

```
file_path = current_folder\\sub_folder\\name.txt
```

✓ OS-independent path:

```
path = os.path.join(comma_separated list of sub_folders)
```

```
data_folder = os.path.join('source_data','dna_subject_1','experiment_3','trial_9')
file_to_open = os.path.join('data_folder', 'data_1_3_9.csv')
print(data_folder, '\n', file_to_open)
```

```
source_data/dna_subject_1/experiment_3/trial_9
 data_folder/data_1_3_9.csv
```

Operations on the file system: check if a file exists

- `os.path.isfile(file_name)`: return `True` if file `file_name` exists, `False` otherwise; if `file_name` is not specified through a path, the existence of the file is referred to the current folder

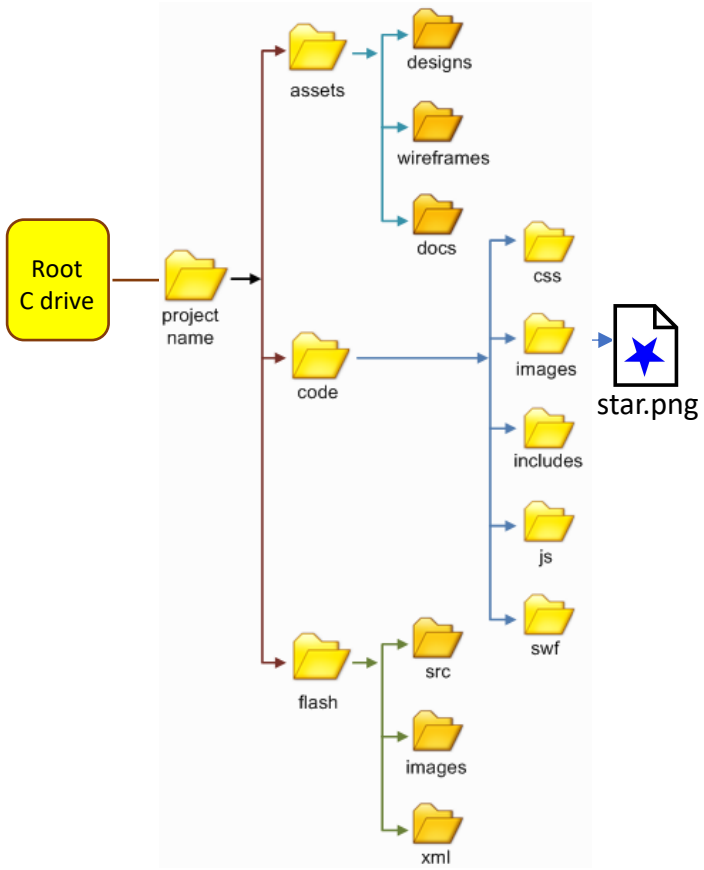


```
import os

if os.path.isfile('star.png'):
    print('File star.png is in the current folder')
elif os.path.isfile('/project name/assets/star.png'):
    print('File star.png is in folder assets')
else:
    print('File star.png is not in the file system')
```

Operations on the file system: check if a folder exists

- `os.path.isdir(folder_name)`: return `True` if folder `folder_name` exists, `False` otherwise; `folder_name` <u>needs to include the full path</u>, this holds also for the current path

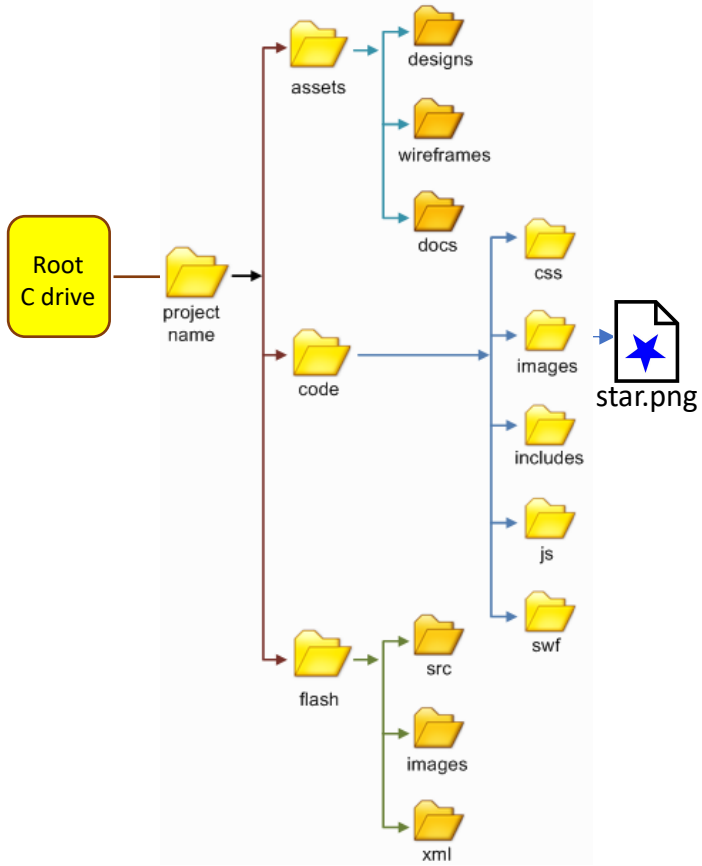


```
import os

if os.path.isdir('/project name/code/images'):
    print('Folder exists in the file system')
else:
    print('Folder is not in the file system')
```

Operations on the file system: check if a named file or folder exists

- `os.path.exists(name)`: return `True` if `name` exists, and it can be <u>either</u> a file or a folder, `False` otherwise; no distinction is made between the two types for checking

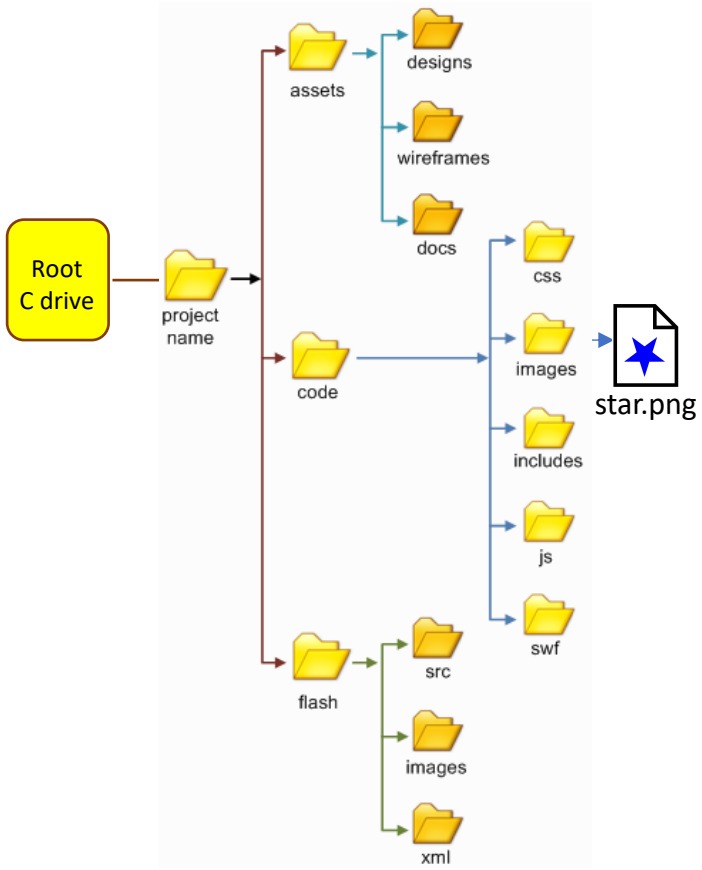


```
import os

if os.path.exists('/project
name/code/images'):
    print('Folder exists in the file system')
else:
    print('Folder is not in the file system')
```

Operations on the file system: get the list of files in current folder

- `os.listdir(path=None)`: Returns a list containing the names (as strings) of the files in the directory `path`. If `path` is `None`, the current directory, `'./'`, is listed

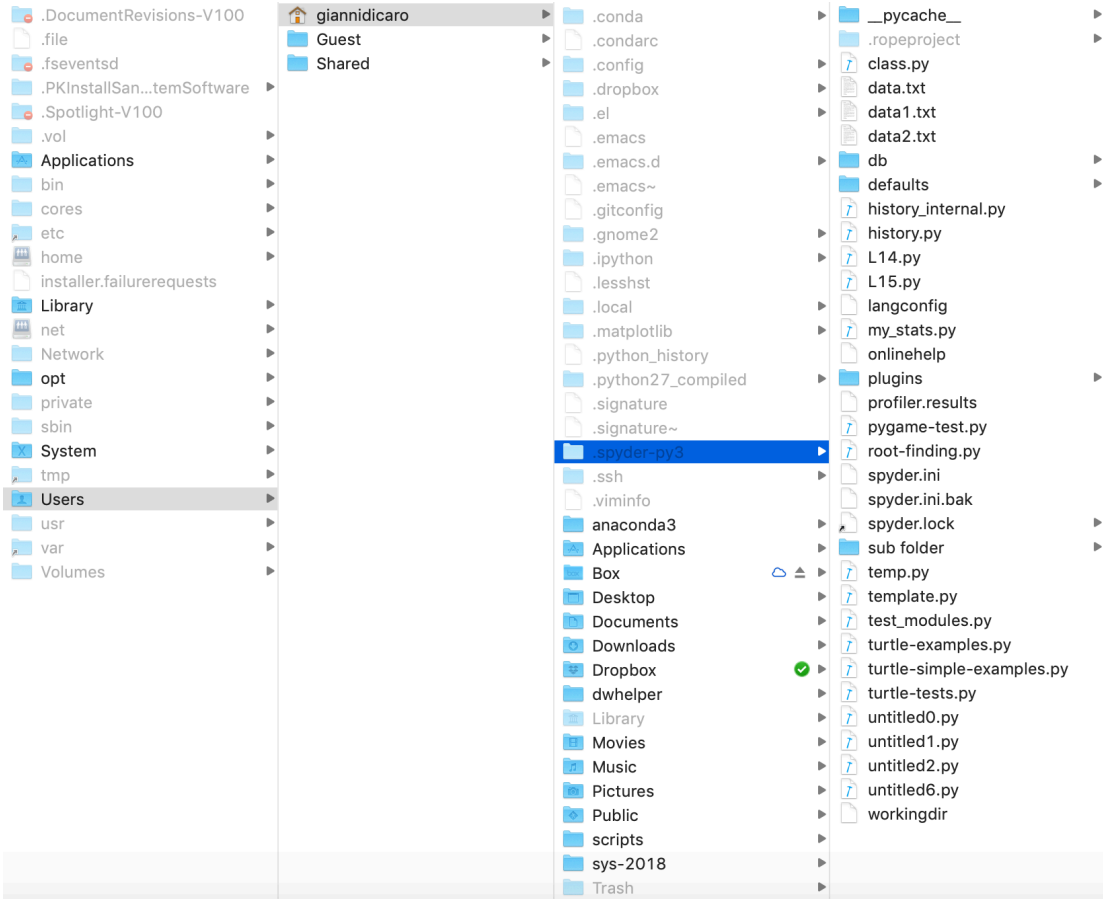


```
import os

file_list = os.listdir()
print(file_list)
```

['untitled0.py', 'untitled1.py', 'turtle-examples.py', 'plugins', 'workingdir', 'onlinehelp', '__pycache__', 'defaults', 'pygame-test.py', 'spyder.ini', 'turtle-tests.py', '.ropeproject', 'temp.py', 'class.py', 'profiler.results', 'template.py', 'db', 'my_stats.py', 'turtle-simple-examples.py', 'data1.txt', 'untitled2.py', 'spyder.lock', 'langconfig', 'L15.py', 'data2.txt', 'history_internal.py', 'untitled6.py', 'test_modules.py', 'spyder.ini.bak', 'L14.py', 'data.txt', 'sub folder', 'root-finding.py', 'history.py']

Is a specific file in the folder?

```
if 'L15.py' in file_list:
    print('File L15.py is in current folder')
```

File L15.py is in the current folder

Operations on the file system: change the working folder

- `os.chdir(path)`: Changes the current path to `path`

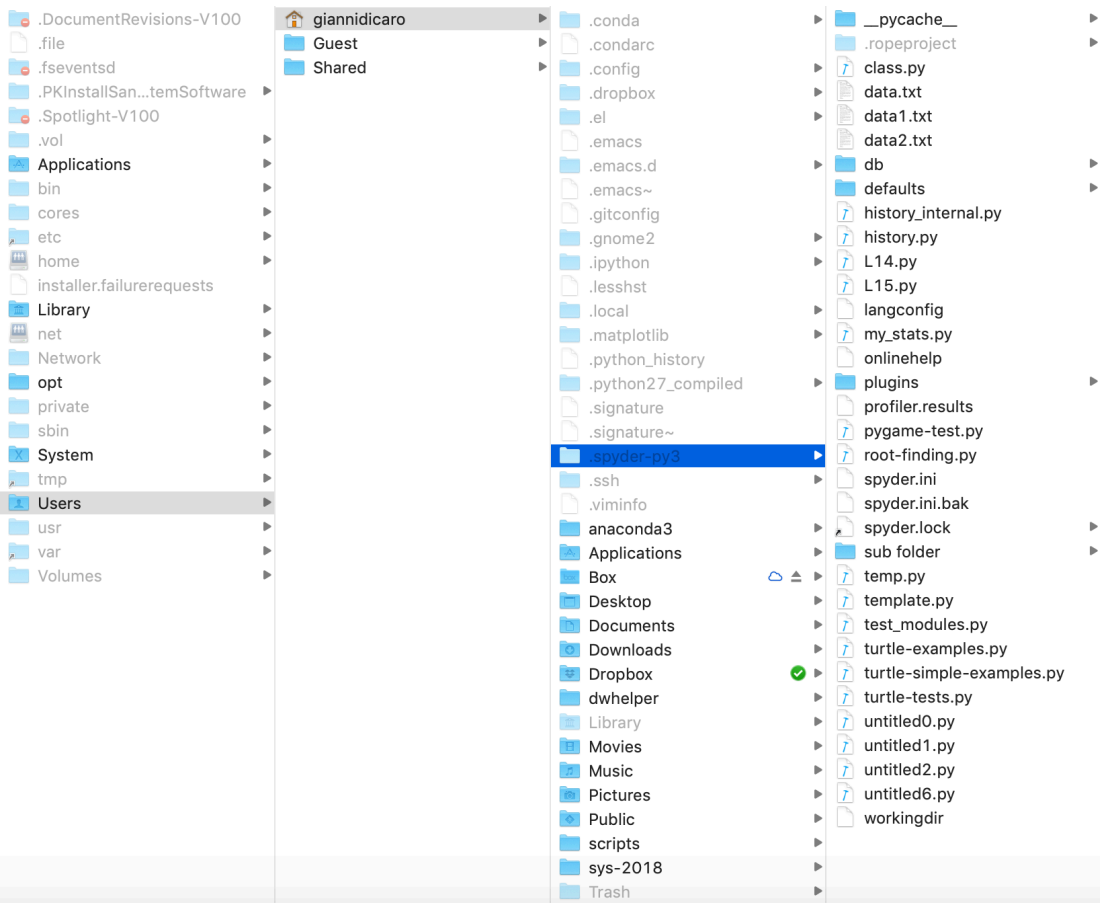


```
import os
print(os.getcwd())
os.chdir('/Applications')   #move anywhere in the fs
print(os.getcwd())
os.chdir('/Users/giannidicaro')  #go back to the home folder
print(os.getcwd())
#print(os.listdir())
os.chdir('./anaconda3') #move down to a specific sub-folder
print(os.getcwd())
os.chdir('../')    #move to a folder up in the hierarchy
print(os.getcwd())
os.chdir('./.spyder-py3')
print(os.getcwd())
```

```
/Users/giannidicaro/.spyder-py3
/Applications
/Users/giannidicaro
/Users/giannidicaro/anaconda3
/Users/giannidicaro
/Users/giannidicaro/.spyder-py3
```

Operations on the file system: create a new folder

- `os.mkdir(path)`: Create a new folder at the given `path`, if `path` only contains a name (and not a full path) the folder is created as a sub-folder of the current one

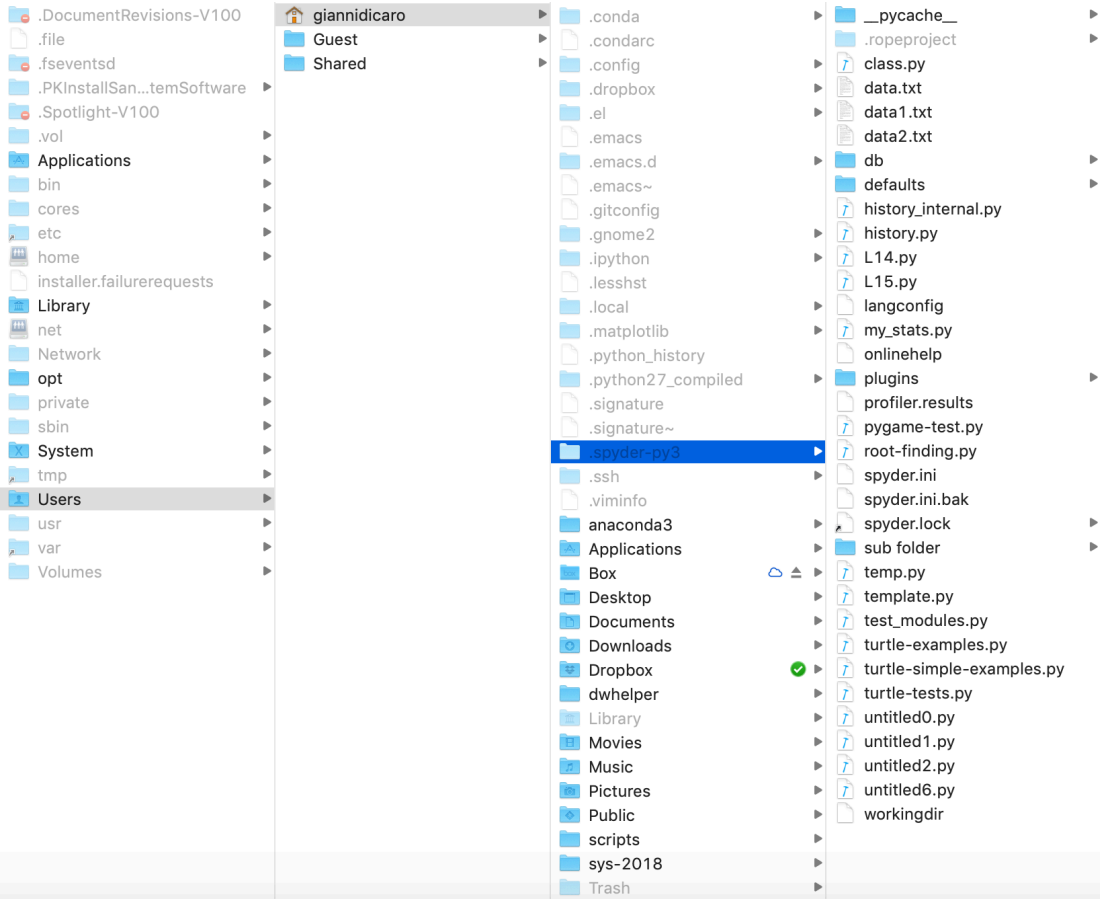


```
import os
os.mkdir('temp')
```

How do we check that the new folder is there?

```
for ff in os.listdir():
    if os.path.isdir(ff):
        print(ff)
```

```
temp
plugins
__pycache__
defaults
.ropeproject
db
sub folder
```

Operations on the file system: remove a folder

- `os.remove(path)`: Remove the folder at the given `path`, the folder must be empty, otherwise a `PermissionError` exception is generated

  - If the folder is empty (and exists) this works with no errors

```
import os
if os.path.isdir('temp'):
    os.rmdir('temp')
```

  - Check first whether the folder is empty or not, remove al folder files

```
import os
if os.path.isdir('temp'):
    os.chdir('temp')
    for file in os.listdir():
        os.remove(file)
    os.chdir('../')
    os.rmdir('temp')
```

Operations on the file system: get status / stats of a file

- `os.stat(file_name)`: Returns a data structure with various information about `file_name`, information is stored in separate fields of the structure, that can be accessed individually with the dot notation

  - **st_mode** – protection bits.
  - **st_ino** – inode number.
  - **st_dev** – device.
  - **st_nlink** – number of hard links.
  - **st_uid** – user id of owner.
  - **st_gid** – group id of owner.
  - **st_size** – size of file, in bytes.
  - **st_atime** – time of most recent access.
  - **st_mtime** – time of most recent content modification.
  - **st_ctime** – time of most recent metadata change.

```
import os
stat_info = os.stat('L15.py')
print(stat_info)
print('Size:', stat_info.st_size)
print('Last modification time:', stat_info.st_mtime)
```

```
~/.spyder-py3$ ls -al L15.py
-rw-r--r--@ 1 giannidicaro  staff  3007 Mar  6 14:22 L15.py
~/.spyder-py3$
```

os.stat_result(st_mode=33188, st_ino=5499079, st_dev=16777220, st_nlink=1, st_uid=501, st_gid=20, st_size=2810, st_atime=1551870605, st_mtime=1551870605, st_ctime=1551870605)
Size: 2810
Last modification time: 1551872218.209256

```
from datetime import datetime
print('Last modification date: ', end='')
print(datetime.fromtimestamp(stat_info.st_mtime).strftime('%Y-%m-%d %H:%M:%S'))
```

Last modification date: 2019-03-06 14:36:58

Special data files: Comma Separated Values (CSV)

- **CSV**: A quite flexible and compact format which is around since long time, and it's the main format used by popular spreadsheet programs such as Excel.
  - Many data repositories make use of CSV as one their standard formats for data.

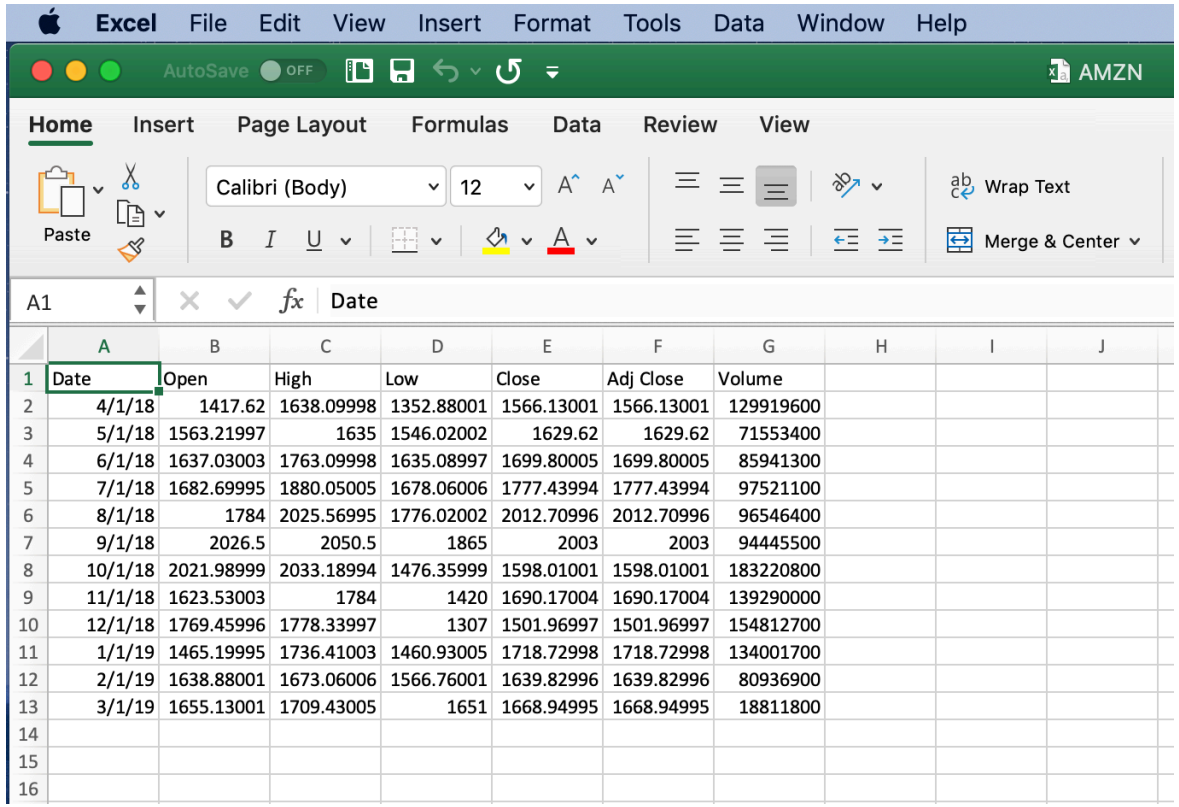

Date	Open	High	Low	Close	Adj Close	Volume
4/1/18	1417.62	1638.09998	1352.88001	1566.13001	1566.13001	129919600
5/1/18	1563.21997	1635	1546.02002	1629.62	1629.62	71553400
6/1/18	1637.03003	1763.09998	1635.08997	1699.80005	1699.80005	85941300
7/1/18	1682.69995	1880.05005	1678.06006	1777.43994	1777.43994	97521100
8/1/18	1784	2025.56995	1776.02002	2012.70996	2012.70996	96546400
9/1/18	2026.5	2050.5	1865	2003	2003	94445500
10/1/18	2021.98999	2033.18994	1476.35999	1598.01001	1598.01001	183220800
11/1/18	1623.53003	1784	1420	1690.17004	1690.17004	139290000
12/1/18	1769.45996	1778.33997	1307	1501.96997	1501.96997	154812700
1/1/19	1465.19995	1736.41003	1460.93005	1718.72998	1718.72998	134001700
2/1/19	1638.88001	1673.06006	1566.76001	1639.82996	1639.82996	80936900
3/1/19	1655.13001	1709.43005	1651	1668.94995	1668.94995	18811800

With Excel

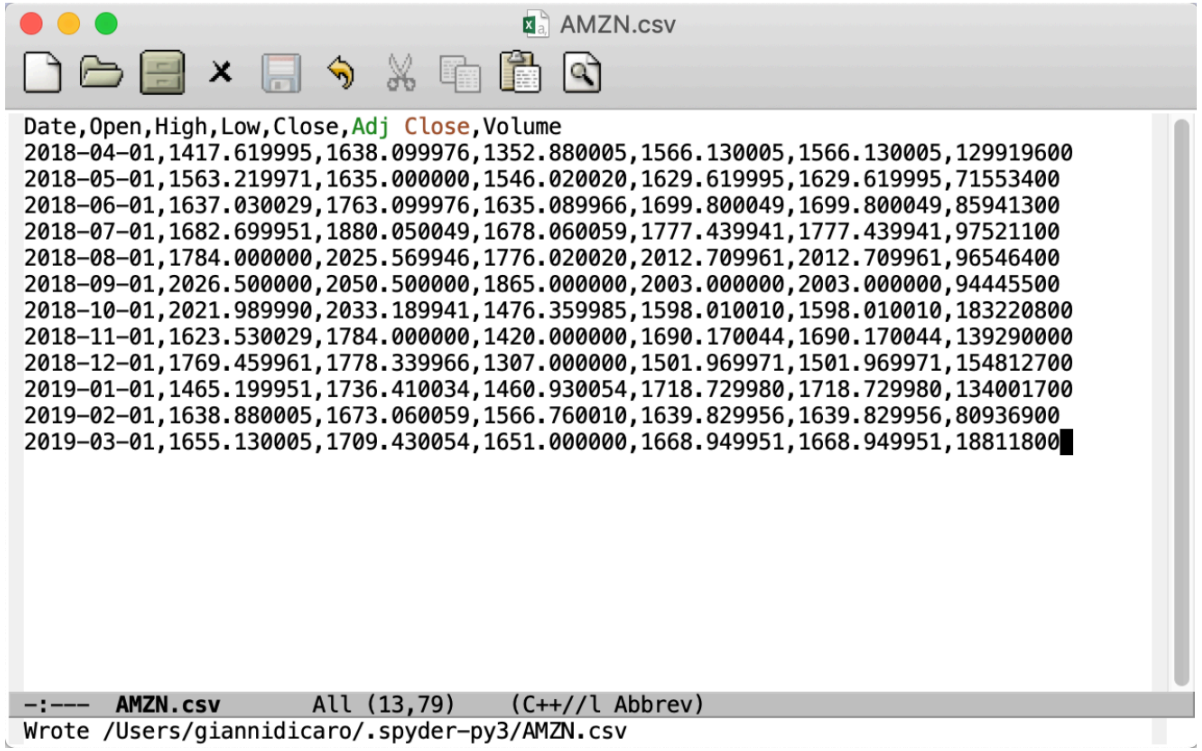

With a text editor

CSV: Tabular data with a predefined separator

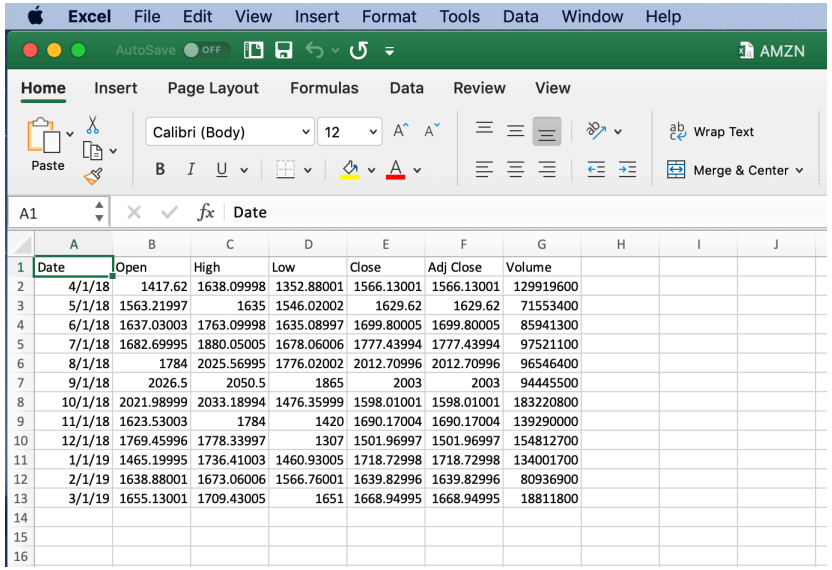

Date	Open	High	Low	Close	Adj Close	Volume
4/1/18	1417.62	1638.09998	1352.88001	1566.13001	1566.13001	129919600
5/1/18	1563.21997	1635	1546.02002	1629.62	1629.62	71553400
6/1/18	1637.03003	1763.09998	1635.08997	1699.80005	1699.80005	85941300
7/1/18	1682.69995	1880.05005	1678.06006	1777.43994	1777.43994	97521100
8/1/18	1784	2025.56995	1776.02002	2012.70996	2012.70996	96546400
9/1/18	2026.5	2050.5	1865	2003	2003	94445500
10/1/18	2021.98999	2033.18994	1476.35999	1598.01001	1598.01001	183220800
11/1/18	1623.53003	1784	1420	1690.17004	1690.17004	139290000
12/1/18	1769.45996	1778.33997	1307	1501.96997	1501.96997	154812700
1/1/19	1465.19995	1736.41003	1460.93005	1718.72998	1718.72998	134001700
2/1/19	1638.88001	1673.06006	1566.76001	1639.82996	1639.82996	80936900
3/1/19	1655.13001	1709.43005	1651	1668.94995	1668.94995	18811800

- ✓ As a default, fields are separated by **commas**
- ✓ Other custom separators can be defined and employed

Columns: **N labels**

Rows: **M data record**, each with N (labeled) fields

row 1: column 1, column 2, column 3, ... , column N

row 2: column 1, column 2, column 3, ... , column N

row 3: column 1, column 2, column 3, ... , column N

.....

row M: column 1, column 2, column 3, ... , column N

Matrix / Dictionary

CSV: Tabular data with a predefined separator

- First row may / should include the labels for the column data (however, it's optional)

```
name, address, id, age, sex
J. Smith, Falcon Tower West-Bay, 532720 , 38, M
A. White, Tower 99 The Pearl, 33145, 29, F
```

- This would work but we need to know the meaning of the fields in advance

```
J. Smith, Falcon Tower West-Bay, 532720 , 38, M
A. White, Tower 99 The Pearl, 33145, 29, F
```

<u>Note</u>: there are **spaces**, we'll see that they are irrelevant, the (comma) separator matters!

CSV example file: Mall customer statistics

```
CustomerID,Gender,Age,Annual Income (k$),Spending Score (1-100)
1, Male,  19, 15, 39
2,  Male, 21, 15, 81
3,   Female   ,20,16,6
4,Female,23  ,16  ,77
5,Female,31,17,40
6,Female,22,17,76
7,Female,35,18,6
8,Female,23,18,94
9,Male,64,19,3
10,Female,30,19,72

            … 200 records
```

CSV module: opening and getting the iterator

- ✓ The `csv` module provides a number of methods to effectively and efficiently deal with the basic reading and writing operations on CSV files

```
import csv

file_path = '/Users/giannidicaro/Box/110-Fall19/csv/Mall_Customers.csv'
file_name = file_path.split('/')[-1]

f_csv = open(file_path)

csv_data = csv.reader(f_csv, delimiter=',')
```

- `csv.reader(file_handler, <delimiter>)` returns a **csv file iterator**, the variable cvs_data
- The csv file iterator is an object that at each call **reads the next line** in the file and returns it into a **list of strings**, where each list element is a string with a field value, identified based on the given delimiter

CSV module: reading raw

- ✓ We can use the `csv_data` iterator to **loop over all the records** in the file, reading record by record in the variable `row`, which is a list of strings

```
line_count = 0
for row in csv_data:
    print('Row {:d}: {} (length: {})'.format(line_count, row, len(row)))
    line_count += 1
```

```
Row 0: ['CustomerID', 'Gender', 'Age', 'Annual Income (k$)', 'Spending Score (1-100)'] (length: 5)
Row 1: ['1', ' Male', ' 19', ' 15', ' 39'] (length: 5)
Row 2: ['2', ' Male', ' 21', ' 15', ' 81'] (length: 5)
Row 3: ['3', ' Female ', '20', '16', '6'] (length: 5)
Row 4: ['4', 'Female', '23 ', '16 ', '77'] (length: 5)
Row 5: ['5', 'Female', '31', '17', '40'] (length: 5)
Row 6: ['6', 'Female', '22', '17', '76'] (length: 5)
Row 7: ['7', 'Female', '35', '18', '6'] (length: 5)
Row 8: ['8', 'Female', '23', '18', '94'] (length: 5)
Row 9: ['9', 'Male', '64', '19', '3'] (length: 5)
Row 10: ['10', 'Female', '30', '19', '72'] (length: 5)
```

<u>Note:</u> white spaces do not harm, but stay there because they are part of the fields

Reading/printing using fields

✓ Let's make a nicer reading / printing by exploiting the known organization in fields

```
f_csv.seek(0)  # rewind the file
line_count = 0
for row in csv_data:
    if line_count == 0:   # header with labels
        columns = len(row)
        print('File {} contains {:d} columns: {:s}'.format(file_name,
               columns, ' - '.join(row)))
    else:
        print('ID {} is a {:>6s} of {:2d} years making {:3d}$/year \
               and has a spending score of {:3d}'.format(int(row[0]),
               row[1], int(row[2]), int(row[3]), int(row[4])))
    line_count += 1
f_csv.close()
```

Formatted result

```
File Mall_Customers.csv contains 5 columns: CustomerID - Gender - Age - Annual
Income (k$) - Spending Score (1-100)
ID 1 is a Male of 19 years making 15$/year and has a spending score of 39
ID 2 is a Male of 21 years making 15$/year and has a spending score of 81
ID 3 is a Female of 20 years making 16$/year and has a spending score of 6
ID 4 is a Female of 23 years making 16$/year and has a spending score of 77
ID 5 is a Female of 31 years making 17$/year and has a spending score of 40
ID 6 is a Female of 22 years making 17$/year and has a spending score of 76
ID 7 is a Female of 35 years making 18$/year and has a spending score of 6
ID 8 is a Female of 23 years making 18$/year and has a spending score of 94
ID 9 is a Male of 64 years making 19$/year and has a spending score of 3
ID 10 is a Female of 30 years making 19$/year and has a spending score of 72
```

One-shot reading

```
file_path = '/Users/giannidicaro/ Box/110-Fall19/csv/Mall_Customers.csv'
f_csv = open(file_path)
csv_data = csv.reader(f_csv, delimiter=',')

all_data = list(f_csv)

print(all_data)
f_csv.close()
```

One big list of strings, one per data record

```
['CustomerID,Gender,Age,Annual Income (k$),Spending Score (1-100)\n', '1, Male, 19, 15, 39\n', '2, Male, 21, 15, 81\n', '3, Female ,20,16,6\n', '4,Female,23 ,16 ,77\n', '5,Female,31,17,40\n', '6,Female,22,17,76\n', '7,Female,35,18,6\n', '8,Female,23,18,94\n', '9,Male,64,19,3\n', '10,Female,30,19,72\n', '11,Male,67,19,14\n', '12,Female,35,19,99\n', '13,Female,58,20,15\n', '14,Female,24,20,77\n', '15,Male,37,20,13\n', '16,Male,22,20,79\n', '17,Female,35,21,35\n', '18,Male,20,21,66\n', '19,Male,52,23,29\n',  …
```

What about a different delimiter?

- The new file has the same contents but it's using ; as a filed delimiter
- ✓ Just let csv module to know about it in the `csv.reader()` call

```
file_path = '/Users/giannidicaro/Box/110-Fall19/csv/Mall_Customers-d2.csv'
f2_csv = open(file_path)
csv_data = csv.reader(f2_csv, delimiter=';')
line_count = 0
for row in csv_data:
    print('Line: {}'.format(' '.join(row)))
    line_count += 1
f2_csv.close()
```

What about a different delimiter with more than one character?

```
file_path = '/Users/giannidicaro/Box/110-Fall19/csv/Mall_Customers-d2.csv'
f3_csv = open(file_path)
try:
    csv_data = csv.reader(f3_csv, delimiter='--')
except:
    print("Delimiter must be 1-charater string!")
else:
    line_count = 0
    for row in csv_data:
        print('Line: {}'.format(' '.join(row)))
        line_count += 1
finally:
    f3_csv.close()
```

```
TypeError! delimiter must be 1-character string!
```

What about data that contains commas in the fields?

Three possible strategies, **all requiring modifying the original csv file**:

1. Use a different delimiter in the csv file (e.g., ';')

2. Wrap the data containing commas in quotes: the string between the quotes is not evaluated for the delimiter. The character used for quoting needs to be specified by the `quotechar` optional parameter if different from `"`, which is the default

3. Escape the delimiter character in the data: adding \ *protects* the character from being evaluated as a delimiter. If an escape character is used, it must be specified using the `escapechar` optional parameter.

CSV files are tabular data / dictionaries

Columns: **N labels**

Rows: **M data record**, each with N (labeled) fields

row 1: column 1, column 2, column 3, ... , column N

row 2: column 1, column 2, column 3, ... , column N

row 3: column 1, column 2, column 3, ... , column N

.....

row M: column 1, column 2, column 3, ... , column N

- Column names are the **keys**
- **Each row is a dictionary with N (key, value) pairs**
- `tabular_data[i][key]` access field `key` in the `i`-th record

CSV files are tabular data / dictionaries

```
file_path = '/Users/giannidicaro/ Box/110-Fall19/csv/Mall_Customers.csv'
f_csv = open(file_path)
csv_data = csv.reader(f_csv, delimiter=',')

num_of_keys = len(csv_data.fieldnames)
keys = csv_data.fieldnames
print('File {} has size {} bytes and contains {:d} keys: {:s}\n'.format(file_name,
       size, num_of_keys, ' - '.join(keys)))

tabular_csv = list(csv_data)
# tabular_csv is a list of records in the form of ordered dictionaries

print(tabular_csv[1]['name’])

for i in range(len(tabular_csv)):
    for k in range(num_of_keys):
        print('{:9s} '.format(tabular_csv[i][keys[k]]), end='')
    print('\n')

f_csv.close()
```