STM32

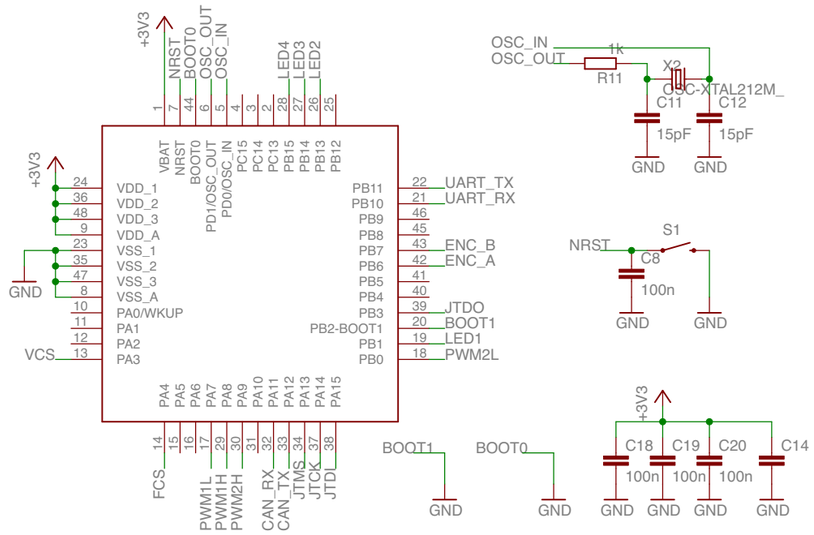

H-BRIDGE

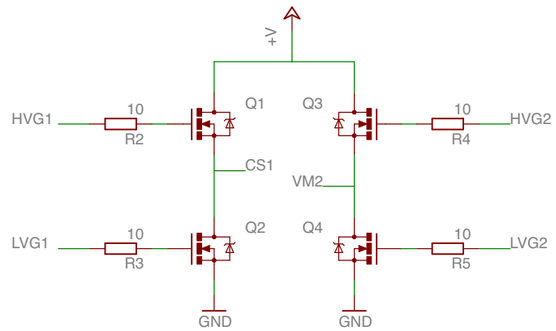

MOSFET DRIVERS

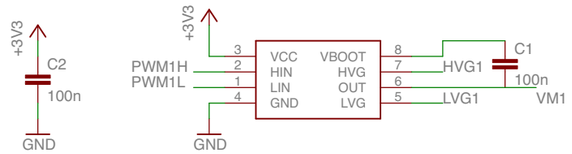

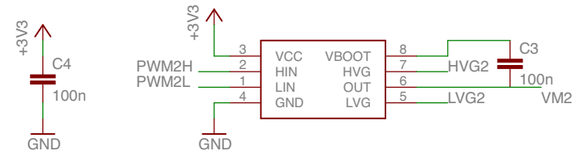

STATUS LEDS

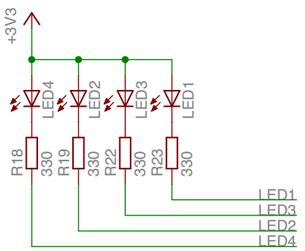

POWER SUPPLY AND CAN BUS DRIVER

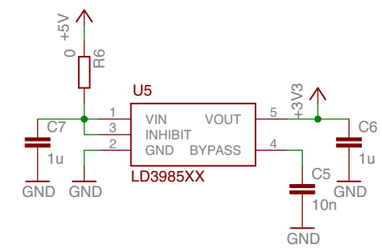

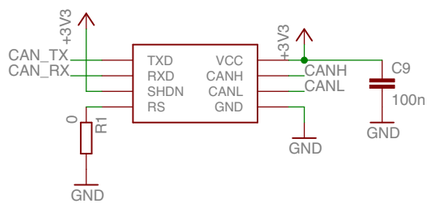

JTAG INTERFACE

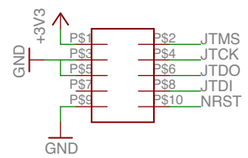

MOSFET DRIVERS

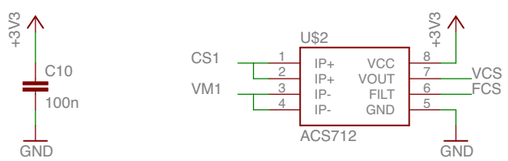

BUS CONNECTORS

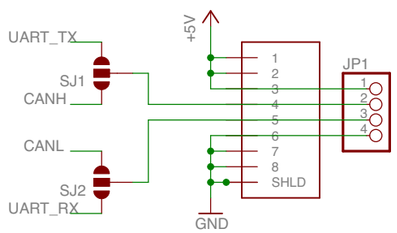

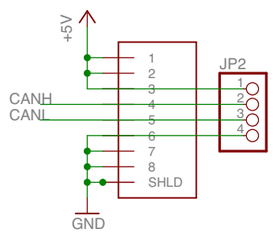

ENCODER CONNECTOR

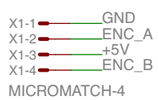

TITLE: MotorBoard	
Document Number:	REV:
Date: 9/16/11 1:09 PM	Sheet: 1/1