Finanziato dall'Unione europea NextGenerationEU

Ministero dell'Università e della Ricerca

Italiadomani PIANO NAZIONALE DI RIPRESA E RESILIENZA

FAIR Future Artificial Intelligence Research

Puoi per favore inserire anche il logo di SERICS vicino a quello di FAIR

AI-based Classification of Adversarial Attacks vs. Hardware Fault Corruptions in the Split Computing context

T. Ahmed Eltaras, G. Esposito, E. Magliano, N. Scarano, J.D. Guerrero Balaguera, L. Mannella, J.E. Rodriguez Condia, A. Ruospo, S. Di Carlo, M. Levorato, A. Savino, M. Sonza Reorda

Politecnico di Torino

Outline

toglierei le virgole alla fine di ciascuna riga

- Introduction,
- System threat analysis,
- Proposed solution,
- Experimental setup,
- Experimental results,
- Conclusion and future works.

Outline

- Introduction,
- System threat analysis,
- Proposed solution,
- Experimental setup,
- Experimental results,
- Conclusion and future works.

Introduction

AI is nowadays playing a crucial role in our everyday life.

Introduction

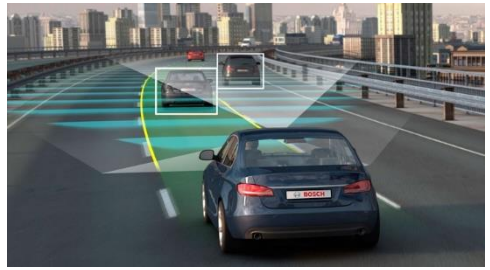

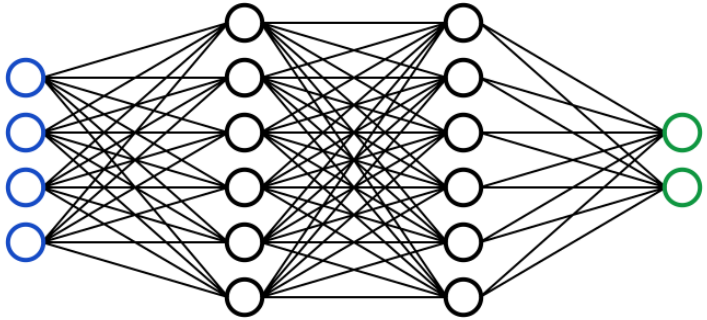

Embedded GPU

AI

Io toglierei however, è un po' troppo da discorso nel paper.

However, the complexity of such algorithms often limits the feasibility of their deployement on devices with limited resources in terms of limited energy or power budget as well as computing capabilities.

Introduction

non definito

Split computing is an NN design paradigm that aims to **enables** implementation of large Deep Neural Networks balancing accuracy with spent computational resources and execution time.

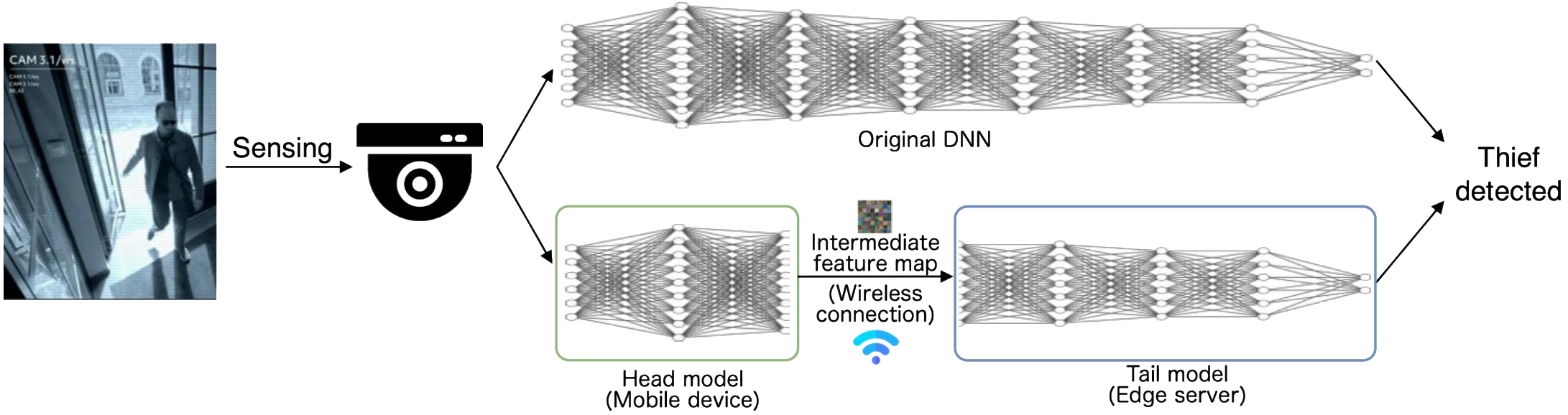

Introduction

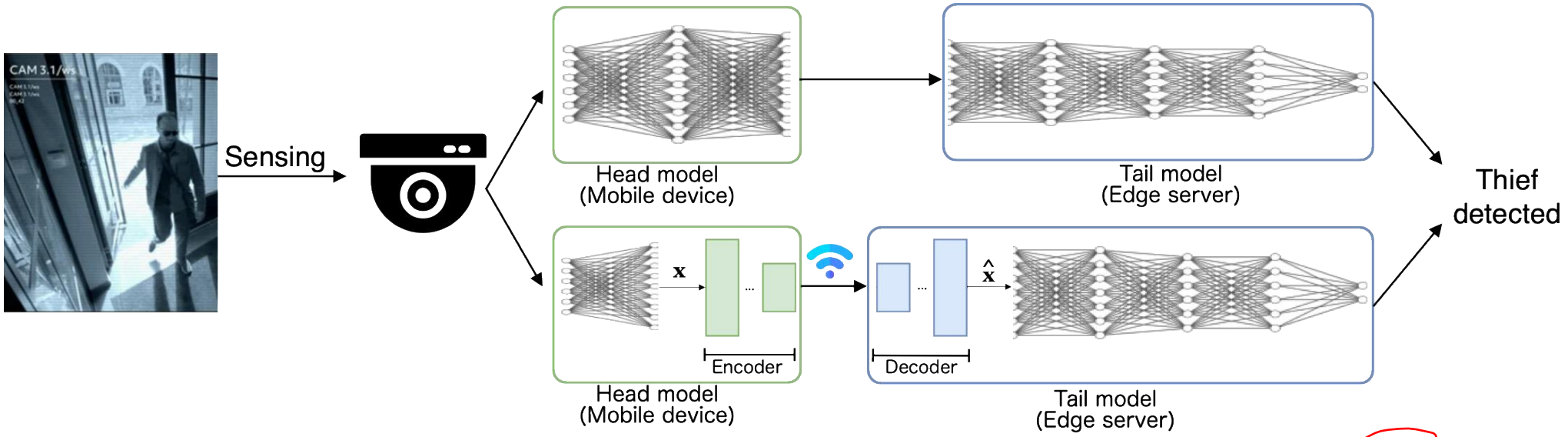

- The bandwidth of the wireless connection poses **limitations** to the transmitted **Feature Map size (FM)**. An **encoder-decoder architecture** is used to compress this FM [2].
- Deploying Split Computing Neural Networks in real safety-critical systems introduces significant challenges concerning **reliability** and **security** as these applications can negatively impact human lives.

[2] Y. Matsubara, R. Yang, M. Levorato, and S. Mandt, "Supervised compression for resource-constrained edge computing systems," in ~~Proceedings of the~~ IEEE/CVF winter conference on applications of computer vision, 2022, pp. 2685–2695. Sposta la referenza un po' più in alto per evitare che sbordi nel marrone.

Outline

- Introduction,
- System threat analysis
- Proposed solution,
- Experimental setup,
- Experimental results,
- Conclusion and future works.

System threat analysis – reliability issues

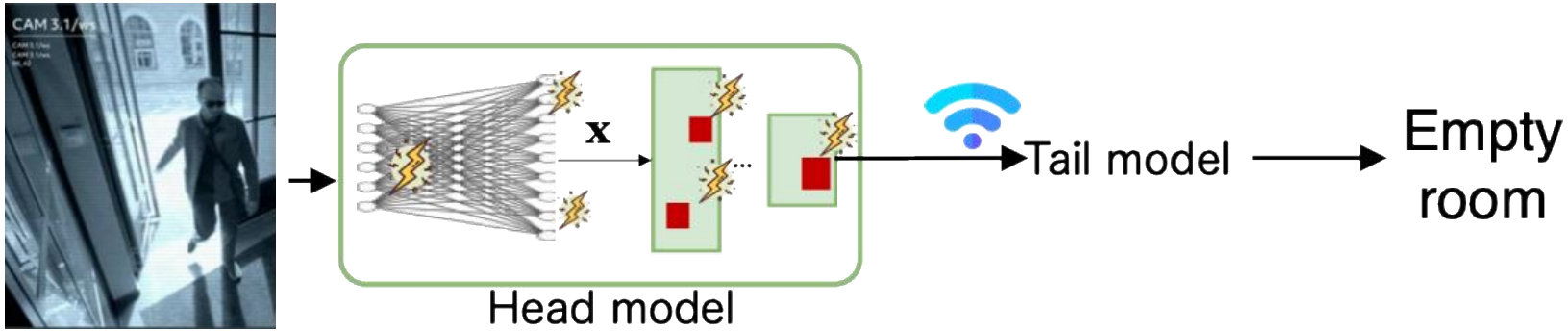

Al posto di On one side metterei un pallino con il numero uno o la lettera A in modo da enumerare i problemi

On one side, hardware faults—whether due to aging or external influences like radiation—can trigger critical failures, potentially resulting in catastrophic outcomes~~, such as car accidents~~.

System threat analysis – security issues

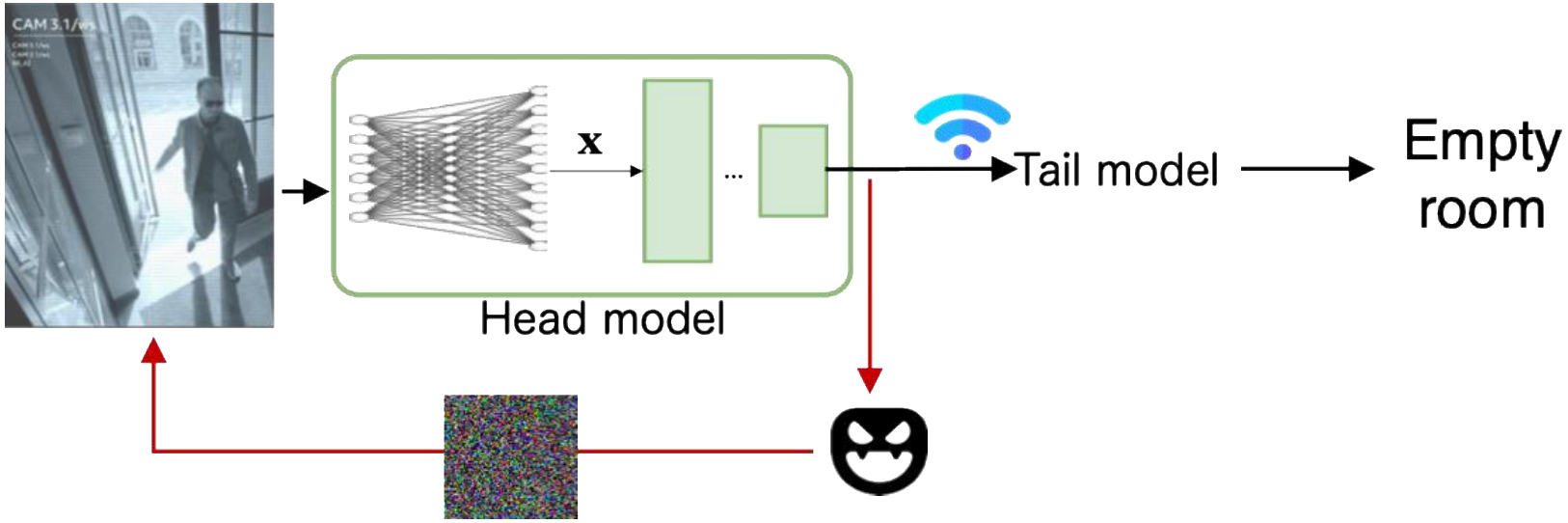

Vedi slide precedente

On the other hand, malicious attacks can tamper with internal data during Head–Tail communication, disrupting tasks like object detection and lane keeping—~~jeopardizing vehicle safety~~.

System threat analysis

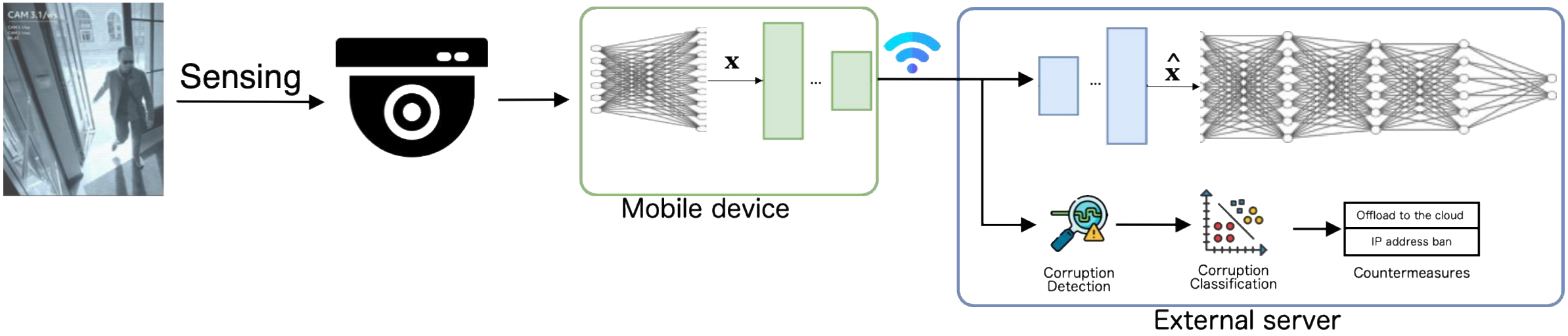

Intendi l'impatto sull'accuracy delle NN con SC? Così non è chiaro di impatto su cosa.

While the **impact** on the Split Computing Neural Network may be similar, the diverse nature of the **threats** (i.e., reliability or security issues) necessitates **tailored countermeasures**.

System threat analysis

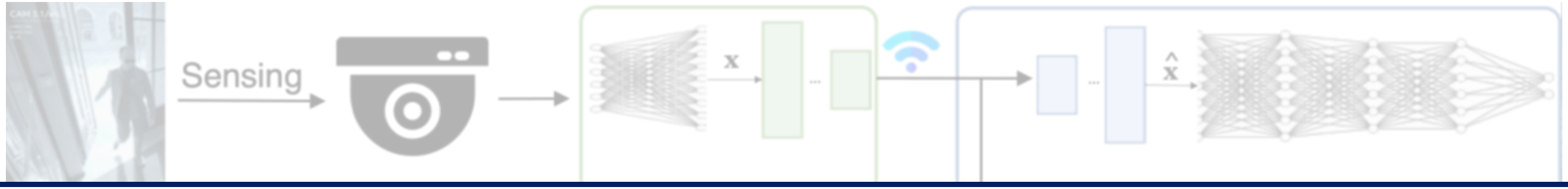

~~Thus,~~ distinguishing between hardware faults and security attacks is essential to enable targeted countermeasures tailored to each specific threats.

While the **impact** on the Split Computing Neural Network may be similar, the diverse nature of the **threats** (i.e., reliability or security issues) necessitates **tailored countermeasures**.

System threat analysis

Forse sarebbe meglio intitolare la slide come Goal

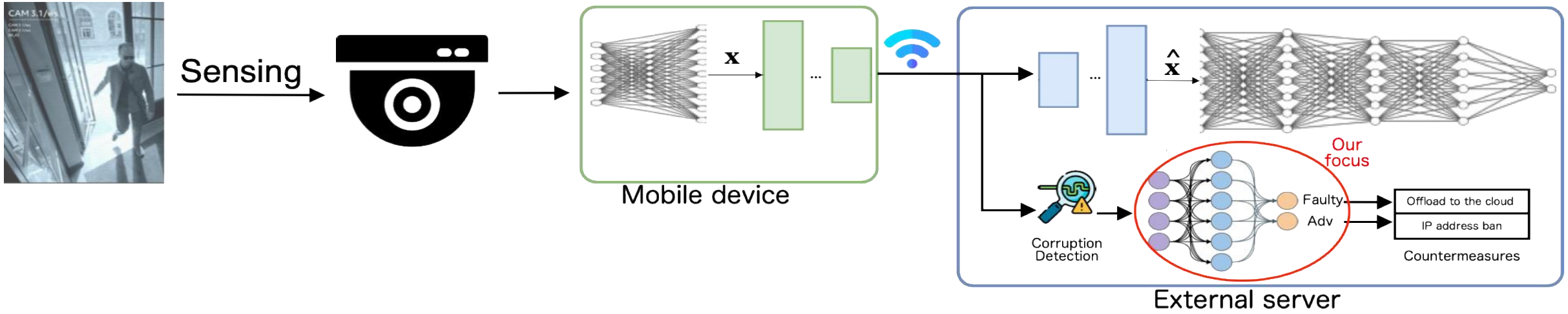

In this work, we focus on designing a system capable of distinguishing between the effect of hardware faults and adversarial attacks as the source of Intermediate Feature Map corruption.

Outline

- Introduction,
- System threat analysis,
- Proposed solution,
- Experimental setup,
- Experimental results,
- Conclusion and future works.

Proposed solution

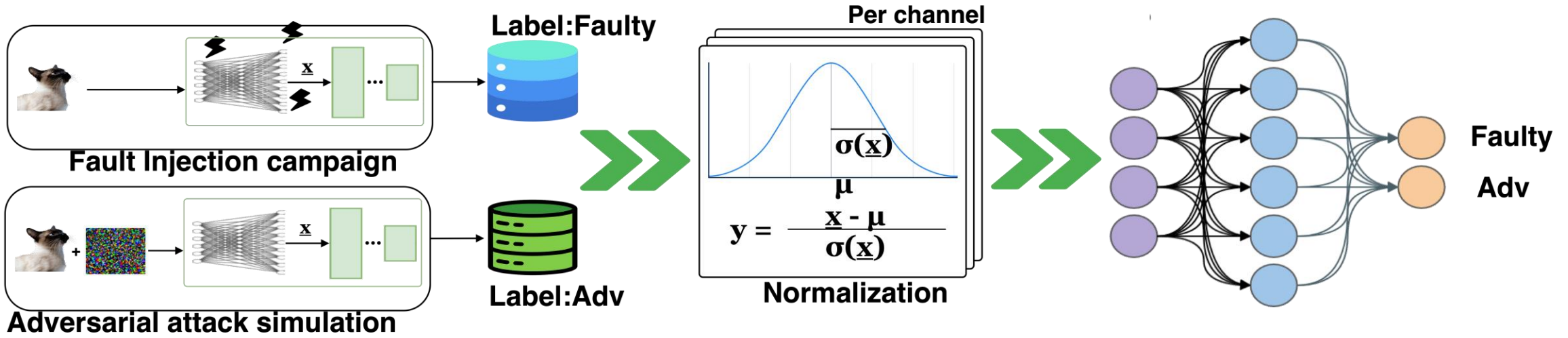

1° step: Data collection

2° step: Data processing pipeline

3° step: NN training and validation

Proposed solution

non definito

Il concetto di neurone qui non è chiaro. Cosa corrompi l'output dell'activation function?

- Reliability fault model:
  - The Faulty dataset is populated with Fault Injection campaigns that **corrupt the neurons' output**.
  - The Corruption pattern resort to a **hardware-aware error** model proposed in [1].

- Security threat model
  - Among the existing security test assessment setups, SC DNNs can be tested through a **gray-box attack model**.
  - Based on the intercepted intermediate feature map, the attacker can **perturb the Head input**.

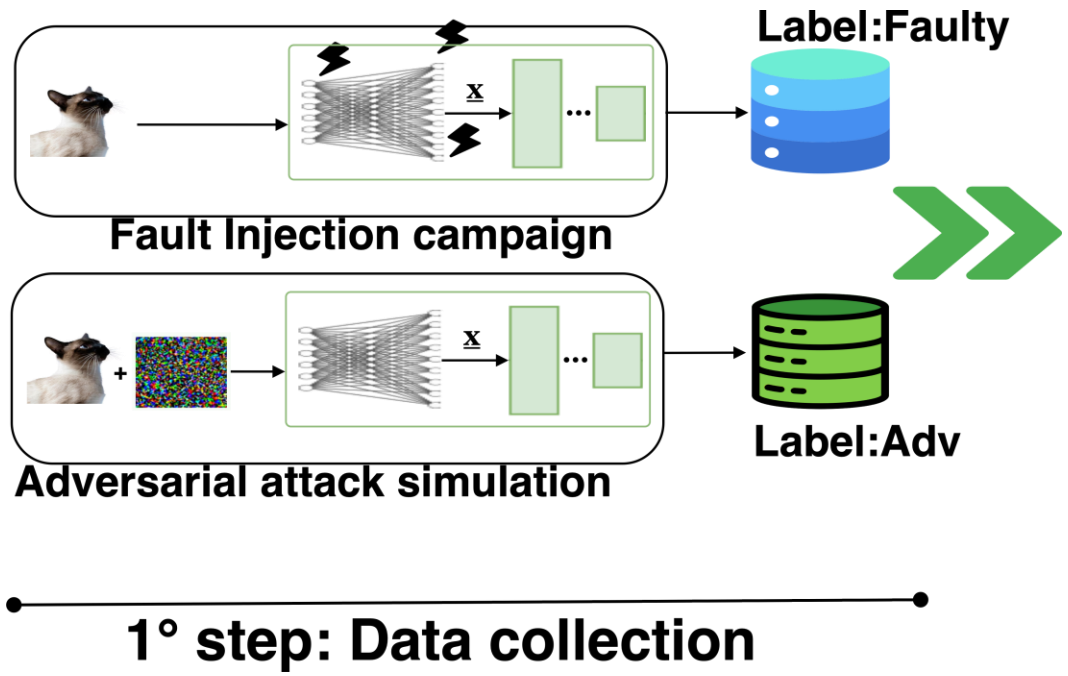

[1] J.-D. Guerrero-Balaguera, J. E. R. Condia, M. Levorato, and M. Sonza Reorda, "Evaluating the reliability of supervised compression for split computing," in 2024 IEEE 42nd VLSI Test Symposium (VTS). IEEE, 2024, pp. 1–6.

Proposed solution

- Data processing pipeline:

1. We performed a **stratified undersampling** to avoid classifier overfitting during training.
2. **Per-channel normalization.**
3. The dataset is **split**, devoting 80% to the training set, 10% to validation and 10% to testing.

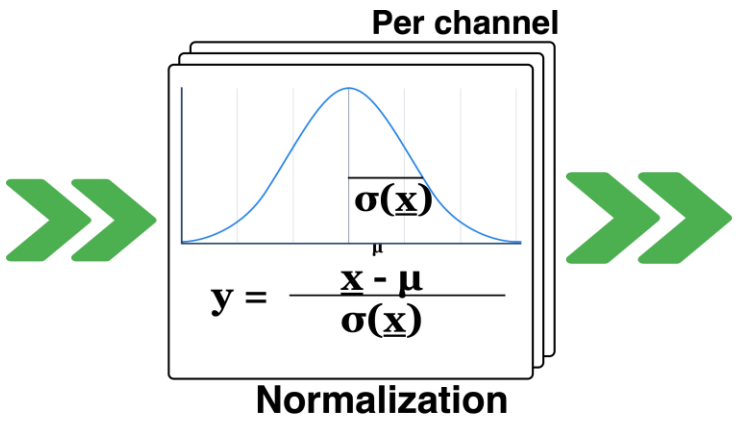

2° step: Data processing pipeline

Proposed solution

- NN training and validation:
  - The classifier is a **Multi Layer perceptron** composed of 3 linear layers.
  - During the training process, we employed the **Adam optimizer** for accurate training convergence to the solution as much close as possible to the optimal one.

    Puoi fornire informazioni sui parametri settati per l'optimizer e in generale il processo di training.
  - We employed a Cross Entropy Loss to train the Neural Network for the **Binary Classification task**.

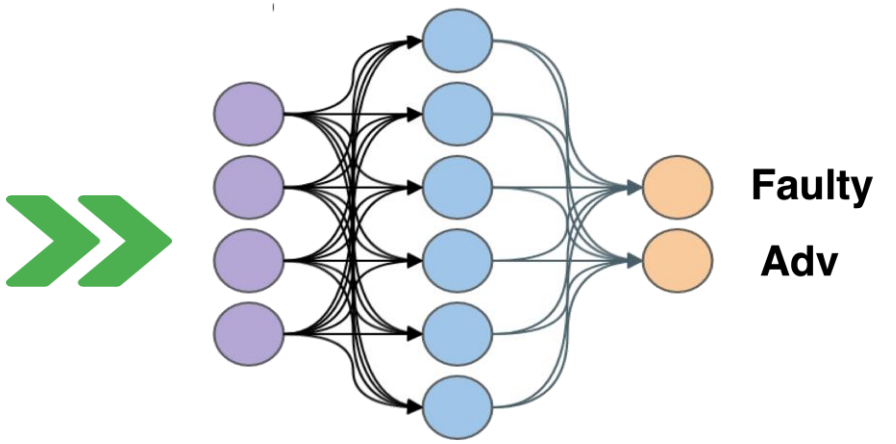

3° step: NN training and validation

Outline

- Introduction,
- System threat analysis,
- Proposed solution,
- Experimental setup,
- Experimental results,
- Conclusion and future works.

Experimental setup

- **Simulation Environment**: SC-DNN architectures and pretrained models from [1] were used to simulate SC systems locally.
- **Model Configuration**: Five CRBQ-configured ResNet-50 models tested on ILSVRC 2012 dataset.
- **Corruption Campaigns**: A hardware-aware error model was used to inject faults and a gradient-based algorithm was used to simulate adversarial attacks on SC Head using 50 representative ImageNet samples.
- **Fault Injection Details**: 1,600 experiments per FI campaign, Bit Error Rates $\in [0.004, 0.1]$, and exponent bit location $\in [19, 31]$.
- **Adversarial Attacks**: 15,000 perturbed samples generated via 300 attack iterations per image.
- **Undersampling Strategy**: Balanced class sizes and removed redundant samples to improve robustness and slow convergence.
- **Dataset Split**: 4,183 training / 1,791 validation / 1,792 test samples.

Outline

- Introduction,
- System threat analysis,
- Proposed solution,
- Experimental setup,
- Experimental results,
- Conclusion and future works.

Results

SC Configuration	*Accuracy*	*Precision*	*Recall*
CRBQ(2)	90.12%	91.68%	90.11%
CRBQ(3)	75.91%	83.74%	75.91%
CRBQ(6)	93.91%	94.58%	93.91%
CRBQ(9)	76.67%	78.59%	76.65%
CRBQ(12)	87.45%	87.92%	87.45%

Split configuration CRBQ(6) achieves a classifier performance of 93.91% in distinguishing between adversarial attacks and hardware faults.

CRBQ(9) shows the lowest classification accuracy of 76.67%.

non definito

The table reports the scores of Accuracy, Precision and Recall for each Split Computing configuration highlighting the MLP classification capabilities.

Results

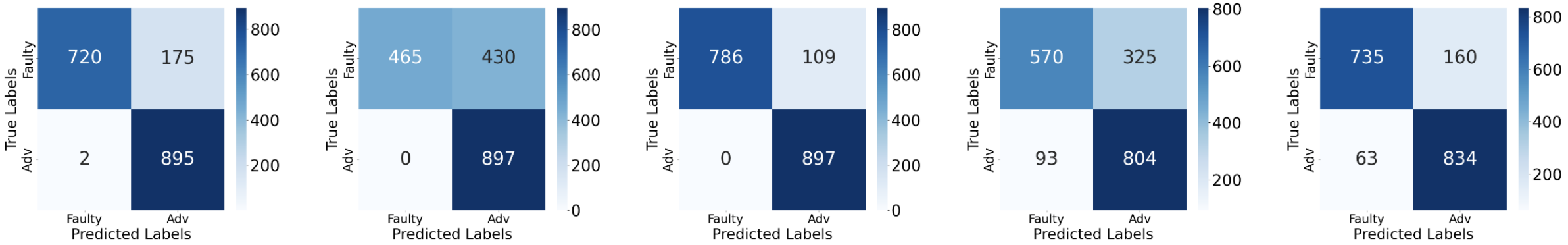

(a) CRBQ (2) (b) CRBQ (3) (c) CRBQ (6) (d) CRBQ (9) (e) CRBQ (12)

The confusion matrices for each Split Computing configuration demonstrate higher effectiveness in predicting adversarial attack labels.

higher rispetto a cosa?

Results

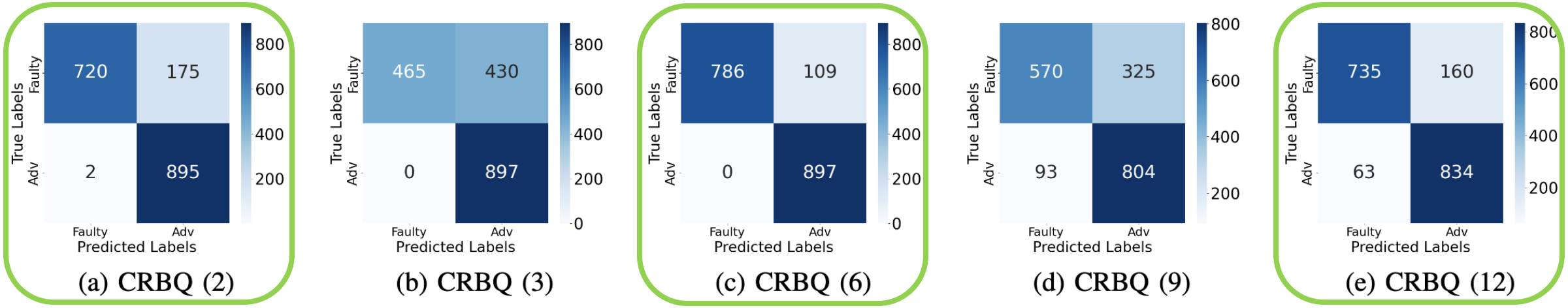

(a) CRBQ (2) (b) CRBQ (3) (c) CRBQ (6) (d) CRBQ (9) (e) CRBQ (12)

Split configurations CRBQ(2) CRBQ(6) CRBQ(12) shows the highest balance between True Positive Rate and True Negative Rate identifying a tendancy of classifying «Faulty» samples as «Adv» samples.

Results

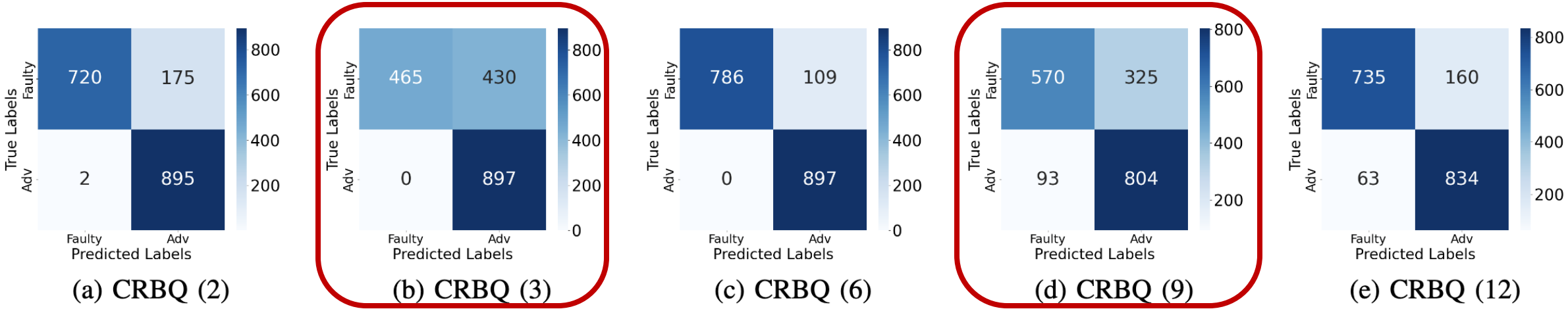

(a) CRBQ (2) (b) CRBQ (3) (c) CRBQ (6) (d) CRBQ (9) (e) CRBQ (12)

CRBQ(3) and CRBQ(9) misclassify the Faulty samples as Adv samples up to 47.9% of the times.

Outline

- Introduction,
- System threat analysis,
- Proposed solution,
- Experimental setup,
- Experimental results,
- Conclusion and future works.

Conclusions and future works

and non va in corsivo

- This work presents, for the first time, a solution for **distinguishing** between **adversarial attacks and hardware-induced corruptions in SC systems**.

to distinguish

- The Neural Network-powered classifier achieved up to **93.91% accuracy**.
- Our study reveals that **CRBQ(6)** is the Split Computing configuration that better enable ~~the implementation of the system capable of distinguishing~~ between Hardware Faults and Adversarial Attacks.
- As future works we plan to extend the selection of Split Computing configurations to **different compression setups**.
- We also plan to explore **alternative classification and anomaly detection** strategies prioritizing the **explainability** of the models.

THANKS!
Question?

Corresponding author email:
giuseppe.esposito@polito.it

09/07/2025

Politecnico di Torino