THIS DOCUMENT IS THE PROPERTY OF SYNAPSE BIOMEDICAL, INC. AND MAY NOT BE USED, REPRODUCED, PUBLISHED OR DISCLOSED TO OTHERS WITHOUT EXPRESSED WRITTEN AUTHORIZATION BY SYNAPSE BIOMEDICAL, INC. THIS DRAWING EMBODIES A CONFIDENTIAL, PROPRIETY DESIGN AND ALL DESIGN, MANUFACTURING USE AND SALES RIGHTS REGARDING SAME ARE EXPRESSLY RESERVED.

ECN	DESCRIPTION	REV	DATE

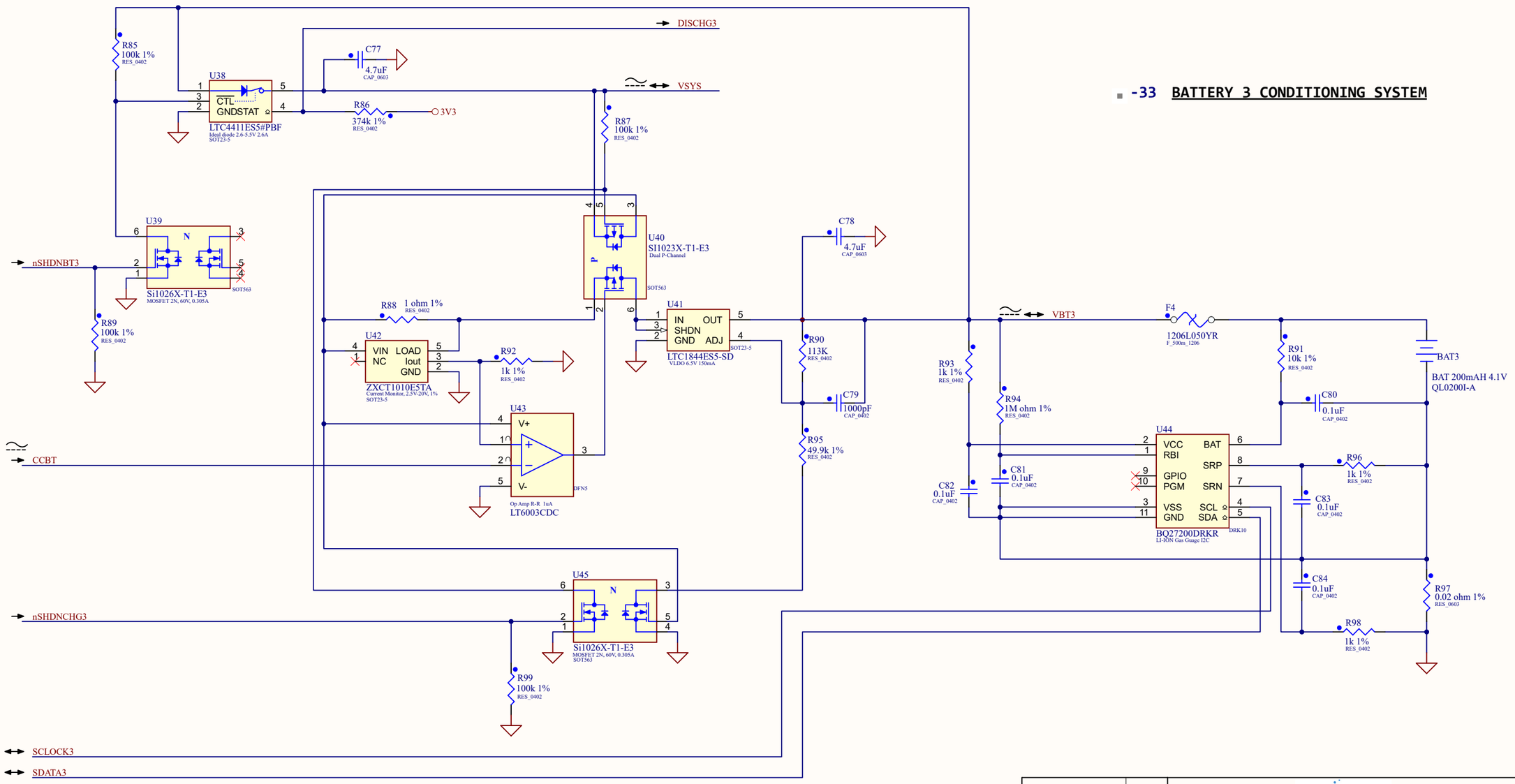

APPROVALS		DATE
ENG:	R. Yoder	7-19-2018
DSN:	K. Kowalski	4-12-2022
CHK:	T. Crish	4-12-2022
REFERENCE DOCUMENTS		
BOM:	*	
ASSY DWG:	51-2001	
FAB DWG:	*	
PCB DWG:	52-2001	

SYNAPSE Biomedical Inc.

PROJECT REVISION: * | DOCUMENT REVISION: * | DESIGN ITEM: *

TITLE: Battery 3 Conditioning

SIZE: B | DWG NO. 51-2001-01-16 | REV 4

SCALE: * | FILE NAME 51-2001-01-16_04.SchDoc | SHEET 16 OF 18