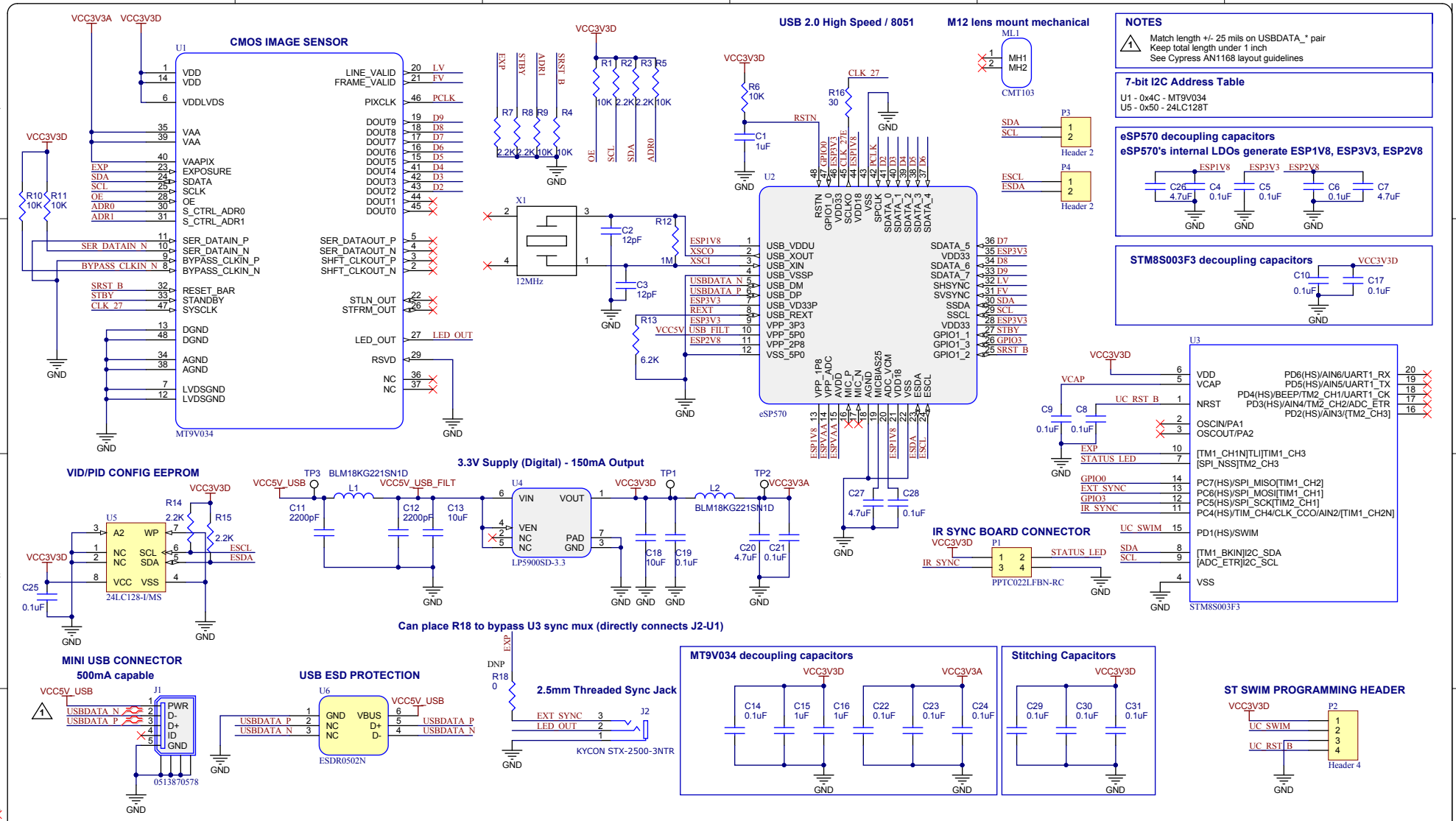
CMOS IMAGE SENSOR
U1
MT9V034
VDD
VDDLVDS
VAA
VAAPIX
EXPOSURE
SDATA
SCLK
OE
S_CTRL_ADR0
S_CTRL_ADR1
SER_DATAIN_P
SER_DATAIN_N
BYPASS_CLKIN_P
BYPASS_CLKIN_N
RESET_BAR
STANDBY
SYSCLK
DGND
AGND
LVDSGND
LINE_VALID
FRAME_VALID
PIXCLK
DOUT9
DOUT8
DOUT7
DOUT6
DOUT5
DOUT4
DOUT3
DOUT2
DOUT1
DOUT0
SER_DATAOUT_P
SER_DATAOUT_N
SHFT_CLKOUT_P
SHFT_CLKOUT_N
STLN_OUT
STFRM_OUT
LED_OUT
RSVD
NC
USB 2.0 High Speed / 8051
U2
eSP570
USB_VDDU
USB_XOUT
USB_XIN
USB_VSSP
USB_DM
USB_DP
USB_VD33P
USB_REXT
VPP_3P3
VPP_5P0
VPP_2P8
VSS_5P0
SDATA_5
VDD33
SDATA_6
SDATA_7
SHSYNC
SVSYNC
SSDA
SSCL
GPIO1_1
GPIO1_3
GPIO1_2
12MHz
M12 lens mount mechanical
ML1
CMT103
MH1
MH2
P3
P4
Header 2
NOTES
Match length +/- 25 mils on USBDATA_* pair
Keep total length under 1 inch
See Cypress AN1168 layout guidelines
7-bit I2C Address Table
U1 - 0x4C - MT9V034
U5 - 0x50 - 24LC128T
eSP570 decoupling capacitors
eSP570's internal LDOs generate ESP1V8, ESP3V3, ESP2V8
STM8S003F3 decoupling capacitors
U3
STM8S003F3
PD6(HS)/AIN6/UART1_RX
PD5(HS)/AIN5/UART1_TX
PD4(HS)/BEEP/TM2_CH1/UART1_CK
PD3(HS)/AIN4/TM2_CH2/ADC_ETR
PD2(HS)/AIN3/[TM2_CH3]
OSCIN/PA1
OSCOUT/PA2
[TM1_CH1N]TLI]TIM1_CH3
[SPI_NSS]TM2_CH3
PC7(HS)/SPI_MISO[TIM1_CH2]
PC6(HS)/SPI_MOSI[TIM1_CH1]
PC5(HS)/SPI_SCK[TIM2_CH1]
PC4(HS)/TIM_CH4/CLK_CCO/AIN2/[TIM1_CH2N]
PD1(HS)/SWIM
[TM1_BKIN]I2C_SDA
[ADC_ETR]I2C_SCL
VSS
VID/PID CONFIG EEPROM
U5
24LC128-I/MS
3.3V Supply (Digital) - 150mA Output
U4
LP5900SD-3.3
BLM18KG221SN1D
IR SYNC BOARD CONNECTOR
P1
PPTC022LFBN-RC
Can place R18 to bypass U3 sync mux (directly connects J2-U1)
MINI USB CONNECTOR
500mA capable
J1
USB ESD PROTECTION
U6
ESDR0502N
2.5mm Threaded Sync Jack
J2
KYCON STX-2500-3NTR
MT9V034 decoupling capacitors
Stitching Capacitors
ST SWIM PROGRAMMING HEADER
P2
Header 4
Oculus
DESCRIPTION
Optical Tracker
ENGINEERING
J. ROBERTSON
DRAWING
J. ROBERTSON
APPROVED
DATE
9 Nov 2013
NOTES
SIZE
B
TYPE
SCH
DOCUMENT NUMBER
N/A
APPROVED DATE
VERSION
1
SHEET
1 of 1