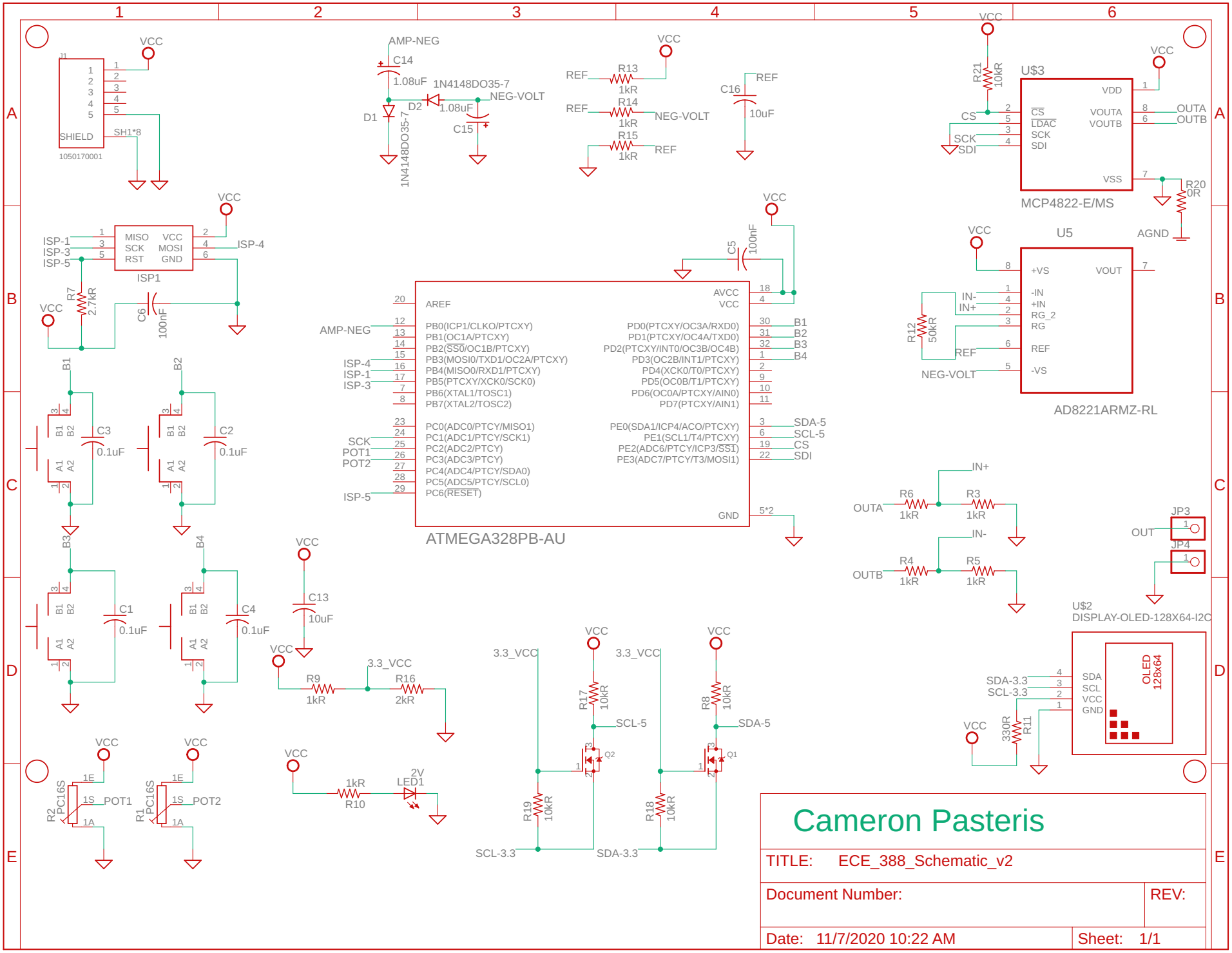

11/7/2020 10:22 AM f=0.90 C:\Users\camer\Documents\EAGLE\projects\Parts Bin\ECE_388_Schematic_v2.sch (Sheet: 1/1)