LLVM Sanitizers & GDB(gui)

Nils Wentzell

Center for Computational Quantum Physics (CCQ)

Flatiron Institute, Simons Foundation

New York

SIMONS FOUNDATION

FLATIRON INSTITUTE
Center for Computational Quantum Physics

Docker Image

hub.docker.com/r/wentzell/debugging_demo

github.com/wentzell/debugging_demo

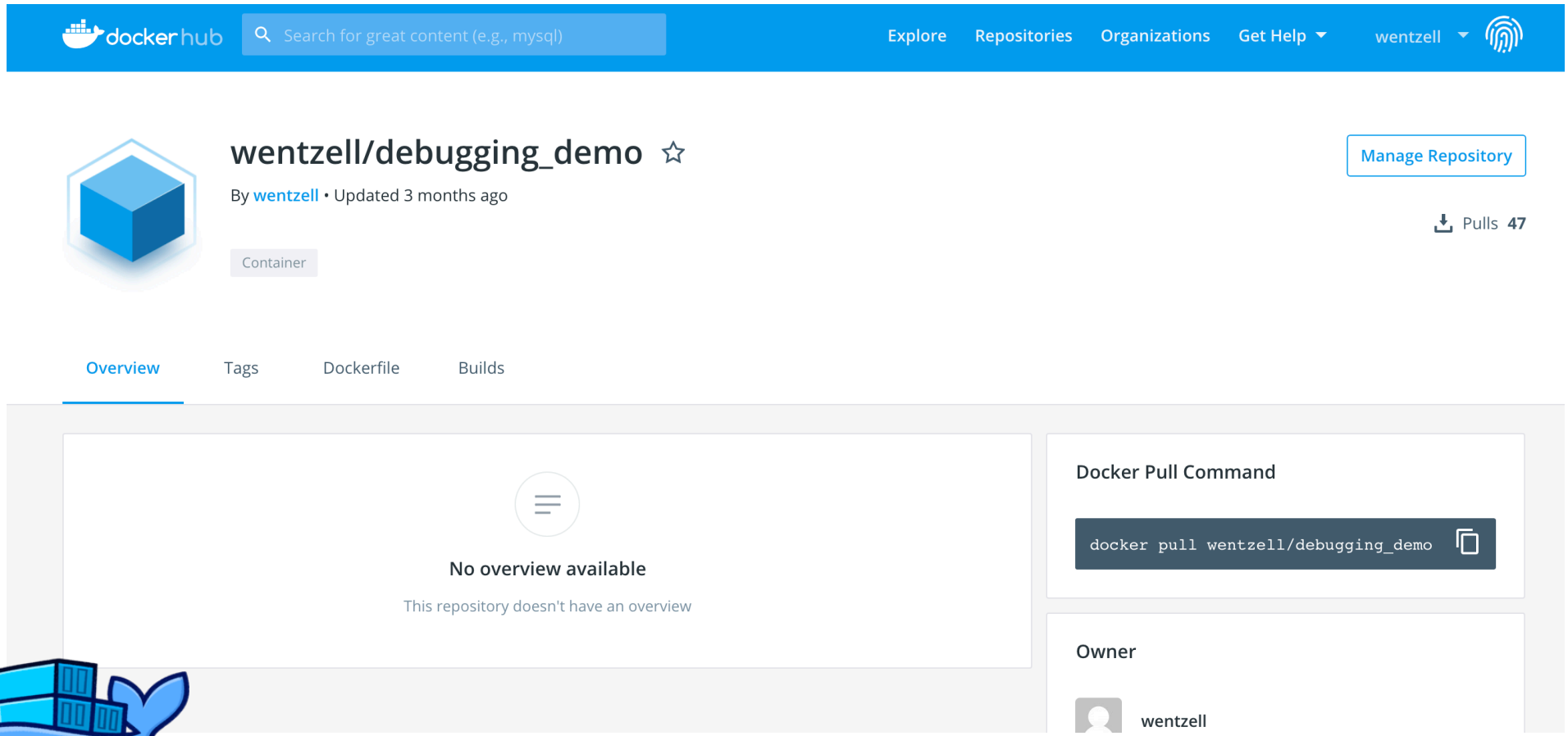

```
docker pull wentzell/debugging_demo
```

Avoiding bugs

- Expressive Code (Modern C++)
- Code Review
- Automated Tests (googletest, TDD)
- Version Control (git)
- Static analyzer's (clang-tidy)

Avoiding bugs

- Expressive Code (Modern C++)
- Code Review
- Automated Tests (googletest, TDD)
- Version Control (git)
- Static analyzer's (clang-tidy)
- Use dynamic analyzer tools to catch them as they appear!
  - Valgrind
  - Clang Sanitizers

Valgrind

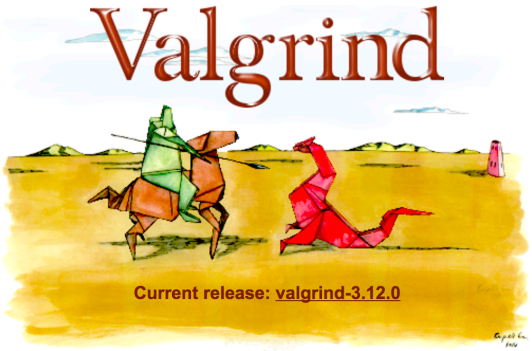

valgrind.org

- Set of dynamic analysis tools:
  - Memcheck (default) `--tool=memcheck`
    Memory error detector
    (Illegal read/writes, memory leaks,
    use of uninitialized memory, …)
  - Cachegrind: Cache profiler `--tool=cachegrind`
  - Callgrind: Callgraph analyzer `--tool=callgrind`
  - Massif: Heap profiler `—tool=massif`

Valgrind

valgrind.org

- Set of dynamic analysis tools:
  - Memcheck (default) `--tool=memcheck`
    Memory error detector
    (Illegal read/writes, memory leaks,
    use of uninitialized memory, …)
  - Cachegrind: Cache profiler `--tool=cachegrind`
  - Callgrind: Callgraph analyzer `--tool=callgrind`
  - Massif: Heap profiler `—tool=massif`

Clang sanitizers

clang.llvm.org

- Dynamic analysis tools included with clang and gcc
  - Address Sanitizer `-fsanitize=address`
    detects buffer overflows, memory leaks, use-after-free,…
  - Memory Sanitizer (clang only) `-fsanitize=memory`
    detects reads of uninitialized memory
  - Undefined Behavior Sanitizer `-fsanitize=undefined`
    detects undefined behaviors
  - Thread Sanitizer `-fsanitize=thread`
    detects data races

Clang sanitizers

clang.llvm.org

- Dynamic analysis tools included with clang and gcc
  - Address Sanitizer `-fsanitize=address`
    detects buffer overflows, memory leaks, use-after-free,…
  - Memory Sanitizer (clang only) `-fsanitize=memory`
    detects reads of uninitialized memory
  - Undefined Behavior Sanitizer `-fsanitize=undefined`
    detects undefined behaviors
  - Thread Sanitizer `-fsanitize=thread`
    detects data races
- Used to systematically detect bugs by Google, Mozilla, …
- Much less memory/runtime overhead than Valgrind!

Comparison

ASan/MSan vs Valgrind (Memcheck)

	Valgrind	ASan	MSan
Heap out-of-bounds	YES	YES	
Stack out-of-bounds		YES	
Global out-of-bounds		YES	
Use-after-free	YES	YES	
Use-after-return		YES	
Uninitialized reads	YES		YES
CPU Overhead	10x-300x	1.5x-3x	3x

Source: Cppcon 2014, Kostya Serebryany

Examples

1-Out of bounds !

- Typical error : read/write outside of the memory of an object.

```
#include <vector>

int fun(int n) {
  std::vector<int> vec(100, 1);  // a 1d "array" of 100 int init to 1
  vec[n + 50] = 500;             // Invalid Write
  return vec[n + 50];            // Invalid Read
}
```

- No bound-checking by default!
- Similar : use a “dangling” or null pointer, …
- How does it manifest itself ?

Demo

1-Out of bounds !

- Segfault : the program crashes … or not !?
- Error can be silent!
- We need to find the first error and stop

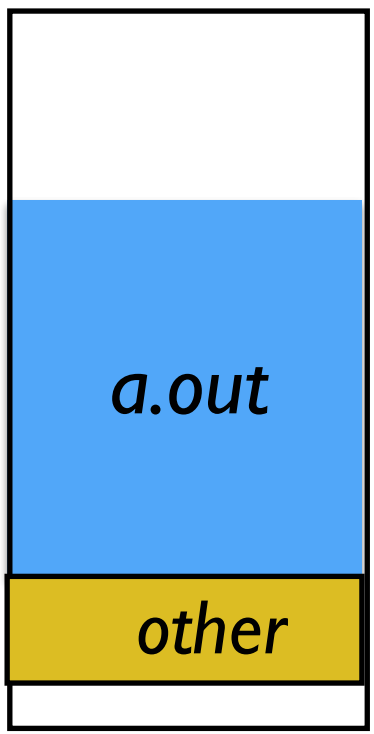

Computer memory

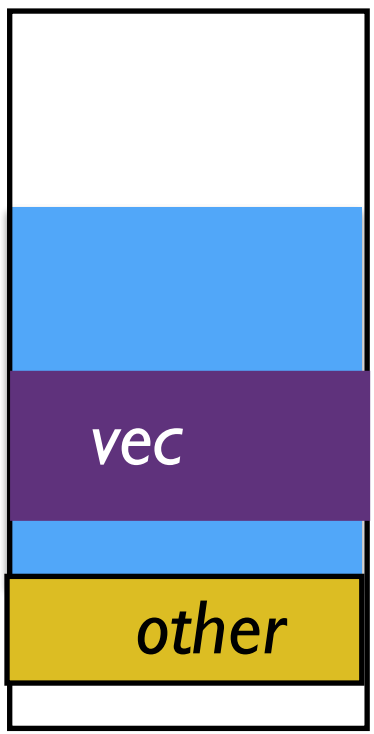

Computer memory

1-Out of bounds !

- Segfault : the program crashes … or not !?
- Error can be silent!
- We need to find the first error and stop

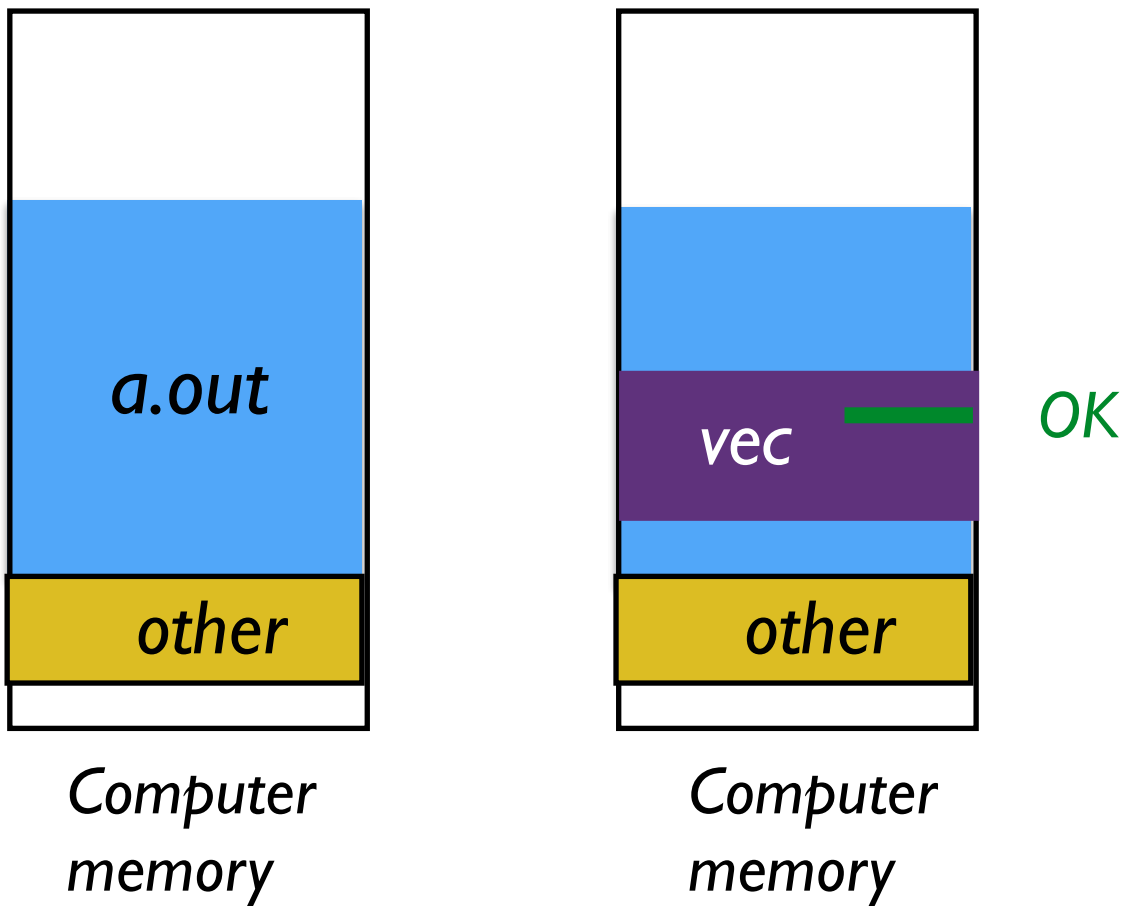

1-Out of bounds !

- Segfault : the program crashes … or not !?
- Error can be silent!
- We need to find the first error and stop

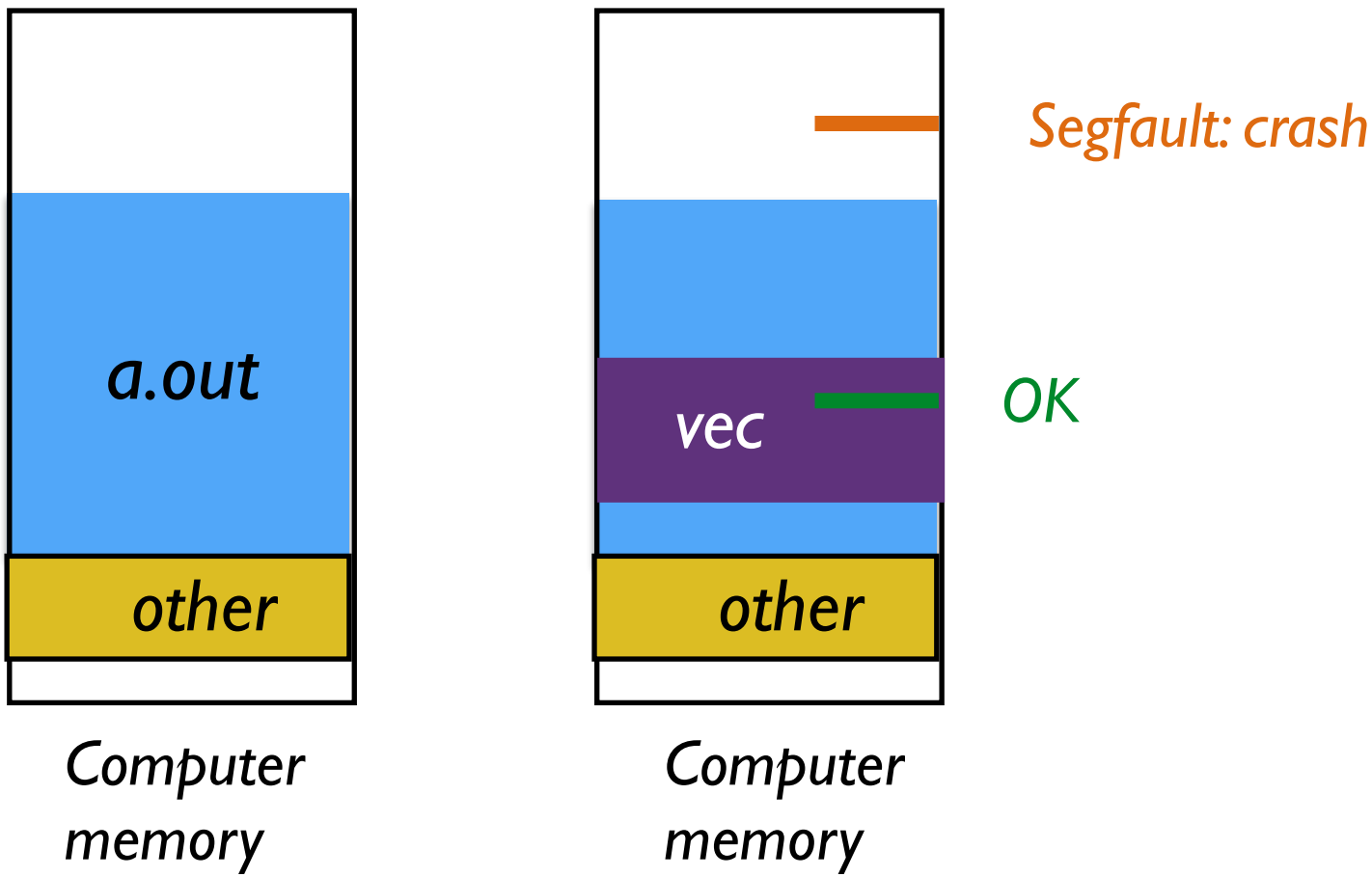

1-Out of bounds !

- Segfault : the program crashes … or not !?
- Error can be silent!
- We need to find the first error and stop

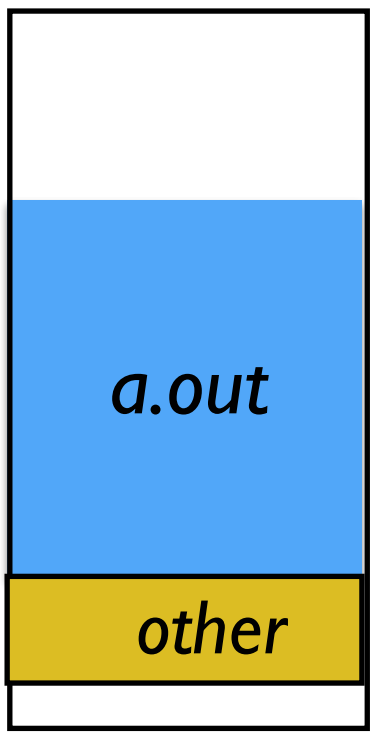

Computer memory

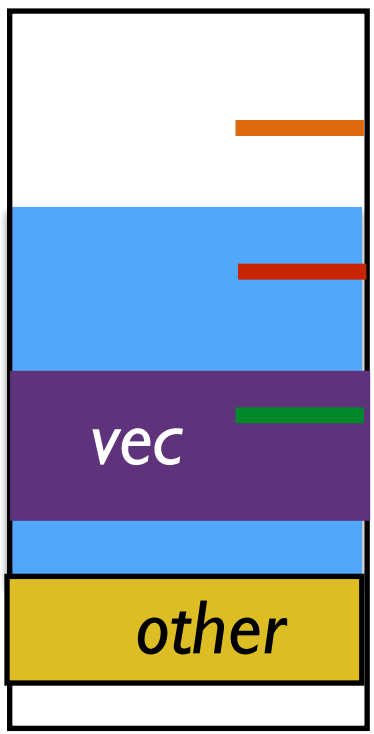

Computer memory

Segfault: crash

Even worse. No crash, but corrupt memory

OK

2-Invalid-iterator

- A Typical error in C++. Pointer or iterator invalidation.

```
#include <iostream>
#include <vector>

int main() {
  std::vector<int> v(10, 3);      // 10 numbers init to 3
  auto p = v.begin();             // an iterator on the beginning of the vector
  std::cout << *p << std::endl;   // print the first value : should be 3
  v.push_back(7);                 // Add one more number to the vector,
  std::cout << *p << std::endl;   // print again the first value ???
}
```

2-Invalid-iterator

- A Typical error in C++. Pointer or iterator invalidation.

```
#include <iostream>
#include <vector>

int main() {
  std::vector<int> v(10, 3);      // 10 numbers init to 3
  auto p = v.begin();             // an iterator on the beginning of the vector
  std::cout << *p << std::endl;   // print the first value : should be 3
  v.push_back(7);                 // Add one more number to the vector,
  std::cout << *p << std::endl;   // print again the first value ???
}
```

- Next generation of compiler will detect this.
  Lifetime Proposal for std C++.

- Experimental branch of clang.

```
→ clang++ -Wlifetime 7-IteratorInvalid.cpp
```

https://godbolt.org/z/Z878Dp

3- Memory leak

- Allocate some memory, and … forget to release it

```
int main() {
  int *g = new int[100];  // allocate the array of 100 int on the heap
  g = nullptr;            // Lost the pointer.

  // ... whatever ...
}
```

- Effect : Often none, except if you call such a function a lot, you will run out of memory !
- Modern C++: no new/delete. Should not pass code review !
- Tools : Valgrind, ASAN (address sanitizer).

```
➜ valgrind --leak-check=full ./a.out
➜ clang++ -fsanitize=address -g Leak.cpp
```

4-Uninitialized variables

- What happens if we forgot to initialize something ?

```
#include <iostream>

int main(int argc, char** argv) {
  int num = atoi(argv[1]);  // get the first arg and make it from string -> int
  int factorial;  // OOPS !
  for (int i = 1; i <= num; ++i) {
    factorial *= i;
  }
  std::cout << num << "! = " << factorial << "\n";
  return factorial;
}
```

- Static analyser
  - Compiler (clang -Wall detects it, but not gcc)
  - Cppcheck

Demo

- Dynamical analyzer: Valgrind, memory sanitiser (MSAN)
- Limitation : libraries must be compiled with *-fsanitize=memory*

```
➜ clang++ -g -fsanitize=memory  -fno-omit-frame-pointer -fsanitize-memory-track-origins factorial.cpp
```

5- Undefined behaviour

- Undefined behavior sanitizer detects various problems:
  - Overflow
  - Division by zero
  - Wrong cast e.g. in calling C lib
  - … Undefined Behavior situation in C++…

5- Undefined behavior

- Integer overflow.

```
#include <iostream>

int main(int argc, char** argv) {
  int num = atoi(argv[1]);  // get the first arg and make it from string -> int

  int t = num << 16;
  int r = t * t;
  std::cout << r << std::endl;

  double x = 1/0.0;
  std::cout << x << std::endl;
}
```

```
→ clang++ -Wall  int_overflow.cpp
→  ./a.out 5
0
→ clang++ -Wall -fsanitize=undefined  int_overflow.cpp
→ ./a.out 5
int_overflow.cpp:7:18:
runtime error: signed integer overflow: 327680 * 327680 cannot be represented in type 'int'
0
```

6-Logic error

- The logic of the code is flawed, but no automatic tool will find this !

```
#include <iostream>

int main(int argc, char** argv) {
  int num = atoi(argv[1]);  // get the first arg and make it from string -> int

  int factorial = 0;  // Oops !
  for (int i = 1; i <= num; ++i) {
    factorial *= i;
  }
  std::cout << num << "! = " << factorial << "\n";
  return factorial;
}
```

Demo

- Let's follow step by step and use the debugger.
- GDB : for many compiled languages: *C, C++, FORTRAN, Java, Pascal, Ada, D, Go*
- GDBgui : a light browser-based frontend to GDB www.gdbgui.com

7-Infinite Loop

- Due to some logic flaw, your code is stuck in an infinite loop !

```
int main() {

  int c = 0;

  while (1) {
    c += 1;
    // whatever
  }
}
```

- You can run, and attach gdb to your process on the fly

```
→ gdb ./a.out --pid=PID_OF_THE_PROCESS
```

Demo

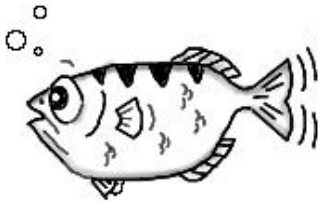

GDB: The GNU Project Debugger

GDB cheatsheet - page 1

Running

`# gdb <program> [core dump]`
Start GDB (with optional core dump).

`# gdb --args <program> <args…>`
Start GDB and pass arguments

`# gdb --pid <pid>`
Start GDB and attach to process.

`set args <args...>`
Set arguments to pass to program to be debugged.

`run`
Run the program to be debugged.

`kill`
Kill the running program.

Breakpoints

`break <where>`
Set a new breakpoint.

`delete <breakpoint#>`
Remove a breakpoint.

`clear`
Delete all breakpoints.

`enable <breakpoint#>`
Enable a disabled breakpoint.

`disable <breakpoint#>`
Disable a breakpoint.

Watchpoints

`watch <where>`
Set a new watchpoint.

`delete/enable/disable <watchpoint#>`
Like breakpoints.

<where>

function_name
Break/watch the named function.

line_number
Break/watch the line number in the current source file.

file:line_number
Break/watch the line number in the named source file.

Conditions

`break/watch <where> if <condition>`
Break/watch at the given location if the condition is met.
Conditions may be almost any C expression that evaluate to true or false.

`condition <breakpoint#> <condition>`
Set/change the condition of an existing break- or watchpoint.

Examining the stack

`backtrace`
`where`
Show call stack.

`backtrace full`
`where full`
Show call stack, also print the local variables in each frame.

`frame <frame#>`
Select the stack frame to operate on.

Stepping

`step`
Go to next instruction (source line), diving into function.

`next`
Go to next instruction (source line) but don't dive into functions.

`finish`
Continue until the current function returns.

`continue`
Continue normal execution.

Variables and memory

`print/format <what>`
Print content of variable/memory location/register.

`display/format <what>`
Like „print“, but print the information after each stepping instruction.

`undisplay <display#>`
Remove the „display“ with the given number.

`enable display <display#>`
`disable display <display#>`
En- or disable the „display“ with the given number.

`x/nfu <address>`
Print memory.
n: How many units to print (default 1).
f: Format character (like „print“).
u: Unit.

Unit is one of:

b: Byte,
h: Half-word (two bytes)
w: Word (four bytes)
g: Giant word (eight bytes)).

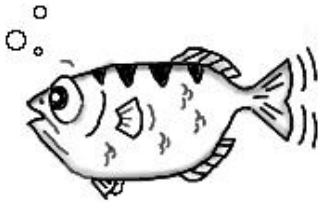

GDB: The GNU Project Debugger

GDB cheatsheet - page 2

Format

a	Pointer.
c	Read as integer, print as character.
d	Integer, signed decimal.
f	Floating point number.
o	Integer, print as octal.
s	Try to treat as C string.
t	Integer, print as binary (*t* = „two“).
u	Integer, unsigned decimal.
x	Integer, print as hexadecimal.

<what>

expression
Almost any C expression, including function calls (must be prefixed with a cast to tell GDB the return value type).

file_name::*variable_name*
Content of the variable defined in the named file (static variables).

function::*variable_name*
Content of the variable defined in the named function (if on the stack).

{*type*}*address*
Content at *address*, interpreted as being of the C type *type*.

$*register*
Content of named register. Interesting registers are $esp (stack pointer), $ebp (frame pointer) and $eip (instruction pointer).

Threads

`thread <thread#>`
Chose thread to operate on.

Manipulating the program

`set var <variable_name>=<value>`
Change the content of a variable to the given value.

`return <expression>`
Force the current function to return immediately, passing the given value.

Sources

`directory <directory>`
Add *directory* to the list of directories that is searched for sources.

`list`
`list <filename>:<function>`
`list <filename>:<line_number>`
`list <first>,<last>`
Shows the current or given source context. The *filename* may be omitted. If *last* is omitted the context starting at *start* is printed instead of centered around it.

`set listsize <count>`
Set how many lines to show in „list“.

Signals

`handle <signal> <options>`
Set how to handle signles. Options are:

(no)print: (Don't) print a message when signals occurs.

(no)stop: (Don't) stop the program when signals occurs.

(no)pass: (Don't) pass the signal to the program.

Informations

`disassemble`
`disassemble <where>`
Disassemble the current function or given location.

`info args`
Print the arguments to the function of the current stack frame.

`info breakpoints`
Print informations about the break- and watchpoints.

`info display`
Print informations about the „displays“.

`info locals`
Print the local variables in the currently selected stack frame.

`info sharedlibrary`
List loaded shared libraries.

`info signals`
List all signals and how they are currently handled.

`info threads`
List all threads.

`show directories`
Print all directories in which GDB searches for source files.

`show listsize`
Print how many are shown in the „list“ command.

`whatis variable_name`
Print type of named variable.

8-Thread/OpenMP

- Race condition. Can you spot it/them ?

```
#include <omp.h>
#include <iostream>
#include <vector>

int main(int argc, char* argv[]) {
  std::vector<double> data(100, 1.0);
  double sum;

  #pragma omp parallel shared(sum, data)
  {
    sum = 0.0;
    #pragma omp for
    for(int i = 0; i < data.size(); i++){
      sum += data[i];
    }
  }
  std::cout << sum << std::endl;
}
```

```
→ clang++ -fopenmp -g -fsanitize=thread 8-RaceCondition.cpp
```

- Clang needs to be configured with -DLIBOMP_TSAN_SUPPORT=1

Thank you for your attention!