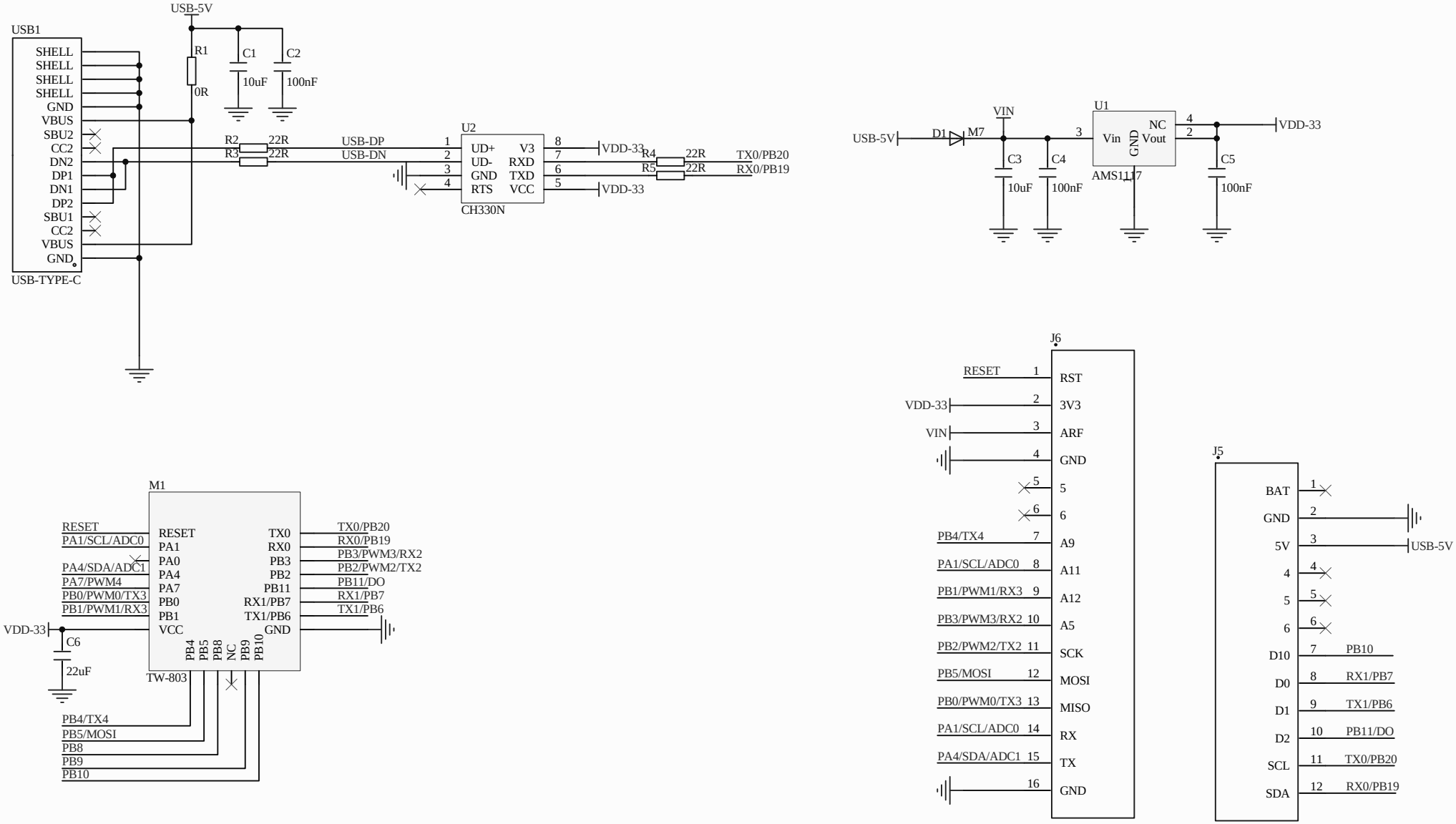


| | | | |
|---|---|---|---|
| DocumentName | HiSpark_W800 | SN | 1 |
| Author | SLJ | Version | V1.0 |
| Date | 2020-12-12 | | |
| CheckedBy | SLJ | | |
| Organization | HOPERUN | | |