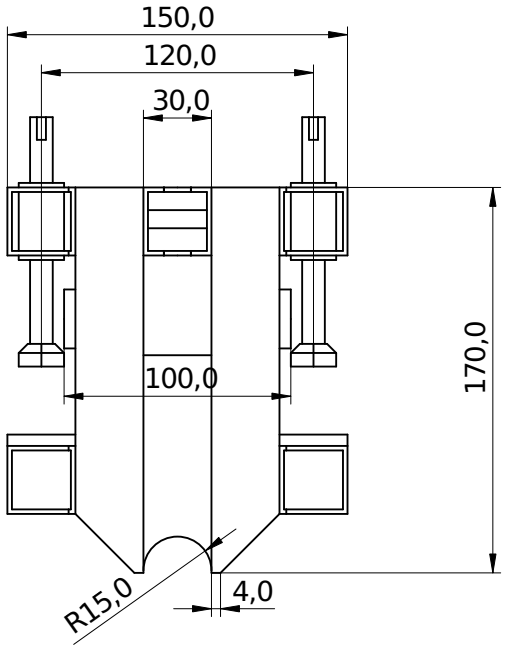


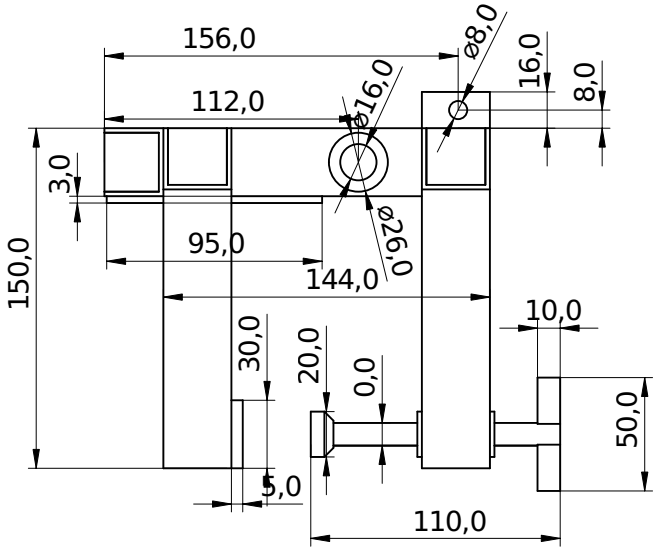


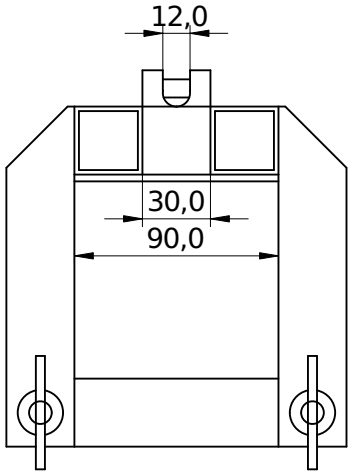


| | | | |
|---|---|---|---|
| DESIGNED BY: Designed by Name<br>DATE: Date | | Title<br>Subtitle | |
| SIZE A4 | | | |
| SCALE Scale | WEIGHT (kg) Weight | DRAWING NUMBER Drawing number | SHEET Sheet |

This drawing is our property; it can't be reproduced or communicated without our written consent.

| | |
|---|---|
| G | _ |
| F | _ |
| E | _ |
| D | _ |
| C | _ |
| B | _ |
| A | _ |