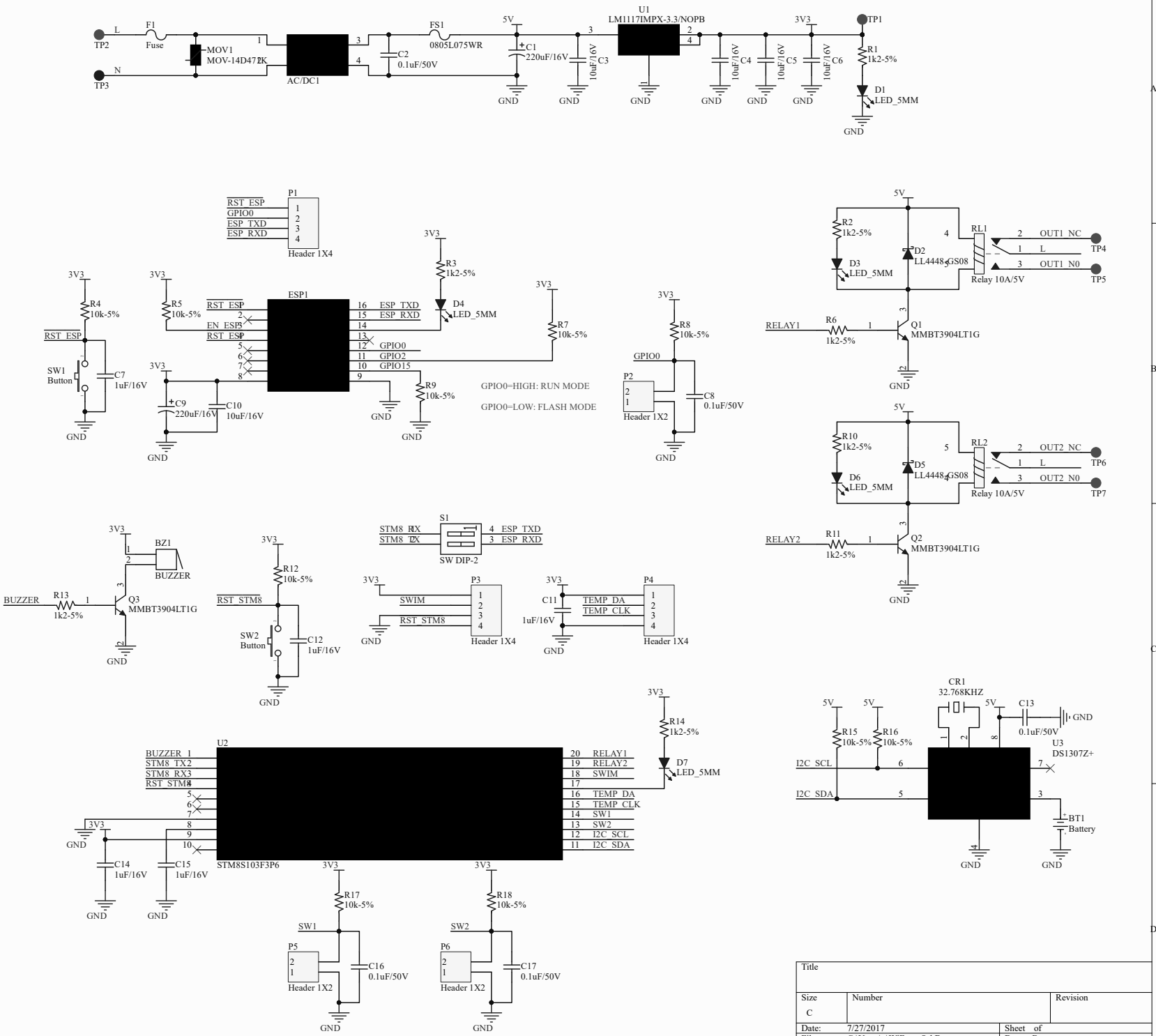
TP2
L
F1
Fuse
MOV1
MOV-14D472K
TP3
N
AC/DC1
FS1
0805L075WR
C2
0.1uF/50V
5V
C1
220uF/16V
U1
LM1117IMPX-3.3/NOPB
C3
10uF/16V
3V3
C4
C5
C6
TP1
R1
1k2-5%
D1
LED_5MM
GND
P1
RST_ESP
GPIO0
ESP_TXD
ESP_RXD
Header 1X4
R3
1k2-5%
D4
LED_5MM
R4
10k-5%
R5
10k-5%
ESP1
EN_ESP
GPIO2
GPIO15
R7
10k-5%
SW1
Button
C7
1uF/16V
C9
220uF/16V
C10
10uF/16V
R9
10k-5%
GPIO0=HIGH: RUN MODE
GPIO0=LOW: FLASH MODE
R8
10k-5%
P2
Header 1X2
C8
0.1uF/50V
R2
1k2-5%
D2
LL4448
D3
LED_5MM
RL1
Relay 10A/5V
OUT1_NC
OUT1_N0
TP4
TP5
RELAY1
R6
1k2-5%
Q1
MMBT3904LT1G
R10
1k2-5%
D5
LL4448
D6
LED_5MM
RL2
OUT2_NC
OUT2_N0
TP6
TP7
RELAY2
R11
1k2-5%
Q2
MMBT3904LT1G
BZ1
BUZZER
R13
1k2-5%
Q3
MMBT3904LT1G
R12
10k-5%
RST_STM8
SW2
Button
C12
1uF/16V
S1
STM8_RX
STM8_TX
ESP_TXD
ESP_RXD
SW DIP-2
P3
SWIM
RST_STM8
Header 1X4
C11
1uF/16V
P4
TEMP_DA
TEMP_CLK
Header 1X4
U2
BUZZER
STM8_TX2
STM8_RX3
RST_STM8
RELAY1
RELAY2
SWIM
TEMP_DA
TEMP_CLK
SW1
SW2
I2C_SCL
I2C_SDA
STM8S103F3P6
R14
1k2-5%
D7
LED_5MM
C14
1uF/16V
C15
1uF/16V
R17
10k-5%
R18
10k-5%
P5
Header 1X2
C16
0.1uF/50V
P6
Header 1X2
C17
0.1uF/50V
CR1
32.768KHZ
C13
0.1uF/50V
R15
10k-5%
R16
10k-5%
U3
DS1307Z+
BT1
Battery
Title
Size
C
Number
Revision
Date: 7/27/2017
Sheet of
File: C:\Users\..\WiFarm.SchDoc
Drawn By: